PARTS LIST
LISTE PIECES DETACHEES
ERSATZTEILLISTE
LISTA PARTI DI RICAMBIO
LISTA DE PIEZAS DE REPUESTO

SABA
M3670GCT
Chassis TX91G

MODULES

MAIN	**TX91G14"MPBPSBGHILL'**	
DVT	**DVTTX91G**	**20525850**

FP23,70	MP160	⚠ 10457130
FP90	MP125	⚠ 10469180
IA01	TDA7253	20203120
IC01	TDA4665	20335750
IF01	TDA1771	10044490
II01	STV8224A2	10451330
II02	STV8225	20165170
IK01	TFMK1330T	10132410
IR01	ST9293J9B1/HAI FM20A	20801170
IR02	TDA8139	10044580
IR03	ST24C04/B1	10030300
IV01	STV2118B (CUT 5.1)	10384680
IX01	SAA5281ZP/E	10258810
IX02	MC7805/CT	46025200

TA05,06,**TF**21, **TI**28,32,**TK**02, **TR**01,04,05	BC848B SMD	35030590
TH02	BC338-40	16000590
TI01	MMBTH10L SMD	16006500
TI03,04,30	DTC144EK SMD	16007030
TI31,**TV**01,02	BC858B SMD	16006330
TL01,**TP**22	BC337-40	45001466
TL02	BUH515D	20666700
TL13	2SC2236Y	16000220
TP20	BUL512HI	10440310
TP23	MPS750	16001340
TP34	BC858C SMD	50854683
TR02	BC548B	16000930
TT51,61,71	BF423	16003110
TT52,62,72	2SC2482N	16003760
TT81	BC807-40 SMD	16006220
TX01	BC558B	16001110
TX02	BC548C	16000940

DA05	BZX55B2V7	80444010
DC01,**DP**34, **DR**07	BZX55C5V1	80444140
DF01,**DL**07,08	1N4001	16008160
DF03,04	BZX55C11	11073670
DF21	BZX55C15	20475420
DF22,**DI**62, **DK**08,**DL**01,11, 20,23,**DP**25, **DR**05,**DT**50,60, 70,86,**DV**01,02, 03,**DX**01,02,03, 04	1N4148	44009209
DH01	BZX55C30	80444170
DH02	BZX55C5V6/ZPD5,6	44025401
DI33,34,50,51, 52,60	BA282	16007510
DK01	MV5491A LED	10036730
DK07	BZX55C6V8	50890650
DL02,04,05,06, **DP**19,23,31,32	RGP10G	10459090
DL12	BZX55B4V3	90578000
DL13	BZX55B9V1	70438220
DL21	ZPD6,8	44074501
DP01,02,03,04	BYW27-1000	10455390
DP29,37,38	LL4148 SMD	16012450
DP33	BZX85C27/ZPY27	10246740
DP70,90	RGP15G	10272800
DP80	BYW76	16009120
DR01	BZX55B13	50890560
DR04,**DT**85	ZPD8,2	44021504
DT51,61,71	BAV21	44044407
DV04	BZX55B8V2	40441820

QC01	4M433619HZ	10087710
QC02	3M579545HZ	10087720
QI01	OFWG1967M FOS	10247670
QI02	33M9HZ FOS	20489330
QI31	6M0HZ	48042300
QI32	5M5HZ	20336430
QI33	6M0HZ	48039700
QI34	5M74HZ	20338170
QR01	8M0HZ	10254430
QV01	503K0HZ	48023700
QX01	27M0HZ	20548370

LI29	38M9HZ	20310930
LI61	32M4HZ	20510040

PI01	10K0 OHM	20115670
PP34	470R0 OHM	10260350

RA25	1R0 OHM 5% 2W	20544230
RA26	470R0 OHM 5% 0,25W	⚠ 15009980
RF05	1R8 OHM 5% 0,50W	20649310
RF09	100K0 OHM 1% 0,25W	50883810
RH16	10R0 OHM 5% 0,25W	⚠ 15009580
RH17,**RX**01	27R0 OHM 5% 0,25W	⚠ 15009840
RL07	1K0 OHM 10% 0,50W	⚠ 10226290
RL08	33R0 OHM 5% 2W	15022830
RL09	8R2 OHM 10% 7W	70432630
RL11	15R0 OHM 5% 0,50W	⚠ 10226280
RL12,13	0R56 OHM 5% 0,50W	⚠ 10313110
RL16,22	82K0 OHM 1% 0,70W	10148310
RL22	54K5 OHM 1% 0,70W	10224940
RP01	5R1 OHM 10% 5W	20369640
RP02	25R0 OHM 220V PTC	⚠ 30093400
RP15	10M0 OHM 5% 0,70W	⚠ 20564520
RP20	1R0 OHM 5% 2,50W	10383240
RP44	1R0 OHM 5% 0,25W	⚠ 15009730
RR20,**RT**68, **RV**04,06,08,10	100R0 OHM 5% 0,25W	⚠ 30943330
RT52,62,72	10K0 OHM 10% 2W	15022700
RV02	56R0 OHM 5% 0,30W	⚠ 15010060

CL04	6N8F 3,5% 1K6V	10374600
CL05	390N0F 10% 250V	43171400

R : RECYCLED PART
: PIECE RECYCLEE
: AUSTAUSCHTEILE
: RICAMBIO RICICLATO
: MODULO REPROCESADO

For any requests, please contact THOMSON multimedia after sales service area
Pour toutes précisions, contactez votre service apres vente local THOMSON multimedia
Für weitere Auskünfte, wenden Sie sich bitte an die THOMSON multimedia Kundendienste
Per precisazioni, contattare l'assistenza tecnica THOMSON multimedia
Para cualquier pregunta, por favor contactar con el responsable de zona del servicio postventa de THOMSON multimedia

No copying, translation, modification on other use authorized. All rights reserved worldwide. • Tous droits de reproduction, de traduction, d'adaptation et d'exécution réservés pour tous les pays. • Sämtliche Urheberrechte an diesen Texten und Zeichnungen stehen uns zu. Nachdrucke, Vervielfältigungen - auch auszugsweise - nur mit unserer vorherigen Zustimmung zulässig. Alle Rechte vorbehalten. • I diritti di riproduzione, di traduzione, e esecuzione sono riservati per tutti i paesi. • Derechos de reproduccion, de traduccion, de adaptacion y de ejecucion reservados para todos los paises.

CL06	680N0F 20% 160V		13076980
CL08	6N8F 5% 400V		10158380
CL09	1U0F 10% 160V	⚠	20706480
CL10,15	330P0F 20% 1K0V		14035270
CL17,**CP**13,91	330P0F 20% 400V		14002220
CL18	270P0F 10% 2K0V		14036000
CP01,02	100N0F 20% 275V	⚠	10331520
CP03	68N0F 20% 250V		10256210
CP04	10N0F 20% 400V		10094420
CP05,06	4N7F 1K0V		10058740
CP10	100U0F 385V		30662900
CP15	1N0F 20% 400V	⚠	43106800
CP21	1N0F 10% 1K0V	⚠	43441400
CP24	10N0F 10% 100V		10279180
CP71	2N2F 10% 400V		10188880
CP79	470P0F 10% 3K0V		14006050
CT84	10N0F 20% 400V		14033040
CT85	1N0F 2K0V		14034870

LL01	DRIVER		20609540
LL03		⚠	30909908
LL05	FCV1410E18	⚠	20202880
LP02		⚠	10395160
LP03	SMT17	⚠	10387120

OTHER PARTS
AUTRES PIECES
SONSTIGE TEILE
ALTRE PARTI
OTRAS PIEZAS

BE01	SCART SOCKET PRISE PERITEL EURO-AV-BUCHSE EUROPRESA NORMALIZZATA EUROCONECTOR		67523300
BT01	CATHODE RAY TUBE SOCKET SUPPORT TUBE CATHODIQUE BILDROEHRENFASSUNG SUPPORTO TUBO CATODICO SOPORTE T.R.C	⚠	20174620
FP01	1A6T TIME-LAG FUSE 1A6T FUSIBLE TEMPORISE 1A6T SICHERUNG 1A6T FUSIBILE TEMPORIZZATO 1A6T FUSIBLE TEMPORIZADO	⚠	48064700
NH01	CTT5000T UHF/VHF TUNER CTT5000T TETE UHF/VHF CTT5000T UHF/VHF TUNER CTT5000T TUNER UHF/VHF CTT5000T SINTONIZADOR UHF/VHF	R	20808880
SK01,02,03,04	MICROSWITCH MICRO CONTACTEUR MIKROSCHALTER MICROINTERRUTORE MICROCONTACTOR		10510600
SP05	ON/OFF SWITCH CONTACTEUR MARCHE/ARRET EIN-AUS SCHALTER CONTATTORE ACCESO/SPENTO CONTACTOR MARCHA/PARADA	⚠	20612390

EQUIPMENT/PRESENTATION
EQUIPEMENT/PRESENTATION
AUSSTATTUNG/GEHAEUSE
PARTI VARIE
EQUIPO/PRESENTACION

370KRB-TC38 CATHODE RAY TUBE 370KRB-TC38 TUBE CATHODIQUE 370KRB-TC38 FARBBILDROEHRE 370KRB-TC38 TUBO CATODICO 370KRB-TC38 T.R.C		⚠	20240320
POWER SUPPLY LEAD CORDON D'ALIMENTATION NETZKABEL CAVO DI ALIMENTAZIONE CABLE DE ALIMENTACION		⚠	10260880
16R OHM 3W LOUDSPEAKER 40X70 16R OHM 3W HAUT PARLEUR 40X70 16R OHM 3W LAUTSPRECHER 40X70 16R OHM 3W ALTOPARLANTE 40X70 16R OHM 3W ALTAVOZ 40X70			2041186A
FRONT PANEL FACADE FRONTPLATTE PANNELLO FRONTALE PANEL FRONTAL			2076468B
BUTTON ASSY ENSEMBLE DE TOUCHES TASTENEINHEIT ASSIEME TASTI CONJUNTO DE TECLAS			20764640
CHASSIS SUPPORT SUPPORT CHASSIS CHASSIS HALTER SUPPORTO CHASSIS SOPORTE CHASSIS			2076459A
ON/OFF BUTTON TOUCHE MARCHE/ARRET EIN-AUS TASTE TASTO ACCESO/SPENTO TECLA MARCHA/PARADA			20764620
REAR PANEL DOS RUECKWAND PANNELLO POSTERIORE TAPA POSTERIOR		⚠	20764660
TELESCOPIC ANTENNA ANTENNE TELESCOPIQUE TELESKOPANTENNE ANTENNA TELESCOPICA ANTENA TELESCOPICA			5087882A
FITTING UPPER CALE SUPERIEURE POLSTER OBEN DISTANZIATORE SUPERIORE CALZO SUPERIOR			20757740
FITTING DOWNER CALE INFERIEURE POLSTER UNTEN DISTANZIATORE INFERIORE CALZO INFERIOR			20757750
FOLDING BOX EMBALLAGE CARTON KARTON IMBALLAGGIO CARTONE EMBALAJE CARTON			20736860
TC3003 REMOTE CONTROL TC3003 TELECOMMANDE TC3003 FERNBEDIENUNG TC3003 TELECOMANDO TC3003 TELEMANDO			10528890
DEGAUSSSING COIL BOBINE DE DEMAGNETISATION ENTMAGNETISIERUNGSSPULE BOBINA DI SMAGNETIZZAZIONE BOBINA DE DESIMANTACION		⚠	20613360

INSTRUCTIONS
NOTICES
ANLEITUNGEN
ISTRUZIONI
MANUALE

M3670GCT PARTS LIST M3670GCT LISTE DE PIECES DETACHEES M3670GCT ERSATZTEILLISTE M3670GCT LISTA PARTI DI RICAMBIO M3670GCT LISTA DE PIEZAS DE REPUESTO	35052830
TX91G SERVICE MANUAL (EUROPE) TX91G DOC TECHNIQUE (EUROPE) TX91G TECHNISCHE DOKUMENTATION (EUROPE) TX91G DOCUMENTAZIONE TECNICA (EUROPE) TX91G DOCUMENTACION TECNICA (EUROPE)	35041190
M3670GCT UM SABA F/I/D/E/P/NL/GB M3670GCT NU SABA F/I/D/E/P/NL/GB M3670GCT BA SABA F/I/D/E/P/NL/GB M3670GCT IU SABA F/I/D/E/P/NL/GB M3670GCT IU SABA F/I/D/E/P/NL/GB	20806640

The description and characteristics given here are of informative significance only, and non committal. To keep up the high quality of our products, we reserve the right to make any changes or improvement without previous notice. • Les descriptions et caractéristiques figurant sur ce document sont données à titre d'information et non d'engagement. En effet, soucieux de la qualité de nos produits, nous nous réservons le droit d'effectuer, sans préavis, toute modification ou amélioration. • Die Beschreibungen und Daten in dieser Anleitung dienen nur zur Information und sind nicht bindend. Um die Qualität unserer Produkte ständig zu verbessern, behalten wir uns das Recht auf Änderungen vor. • Le descrizioni e le caratteristiche date su questo documento sono fornite a semplice titolo informativo e senza impegno. Ci riserviamo il diritto di eseguire, senza preavviso, qualsiasi modifica o miglioramento. • Las descripciones y características que figuran en este documento se dan a título de información y no de compromiso. En efecto, en bien de la calidad de nuestros productos, nos reservamos el derecho de efectuar, sin previo aviso, cualquier modificación o mejora.

THOMSON MULTIMEDIA 46, Quai Alphonse Le Gallo 92648 Boulogne Cedex FRANCE

THOMSON TX91G

MODEL

SERVICE MANUAL

DIFFERENCES BETWEEN BGHILL' , BGDKK', BG,L AND PAL I TX91G - Stereo

	NORM	PS BGHILL' (NTSC VIDEO)		*'PS BGDKK' (NTSC VIDEO)		PS BG,L (N- VID)		PAL I (N-VID)
POS	TOCOM	DESCRIPTION	TOCOM	DESCRIPTION	TOCOM	DESCRIPTION	TOCOM	DESCRIPTION
CH01	13040160	CE 47U0F +20% 16.0V 85C	13082060	CE 10U0F +20% 50.0V 85C	13040160	CE 47U0F +20% 16.0V 85C	13082060	CE 10U0F +20% 50.0V 85C
CI10	15005190	CCCMIN 1N0F +-10% 50.0V	-	Deleted	15005190	CCCMIN 1N0F +10% -10% 50.0V	-	Deleted
CI11	15002130	CE 10U0F +20% 16.0V 85C	-	Deleted	15002130	CE 10U0F +20% 16.0V 85C	-	Deleted
CI12	13074930	CE 22U0F +20% 50.0V 85C	-	Deleted	13074930	CE 22U0F +20% 50.0V 85C	-	Deleted
CI13	15005390	CCCMIN 22N0F +80% -20% 25.0V	-	Deleted	15005390	CCCMIN 22N0F +80% -20% 25.0V	-	Deleted
CI35	-	Deleted	11054120	CCCFMAX 100N0F +-20% 50.0V	11054120	CCCFMAX 100N0F +-20% 50.0V	11054120	CCCFMAX 100N0F +-20% 50.0V
CI52	11063520	CCCFMAX 39P0F +-5% 50.0V NP0	-	Deleted	-	Deleted	-	Deleted
CI53	11063520	CCCFMAX 39P0F +-5% 50.0V NP0	-	Deleted	-	Deleted	-	Deleted
CI60	15005770	CCCMIN 4N7F +-20% 16.0V Y5R	-	Deleted	-	Deleted	-	Deleted
CI65	15005760	CCCMIN 47P0F +-5% 50.0V SL	-	Deleted	10113550	RCFMN 0 OHM +0% 100MI0W	-	Deleted
CI66	40432440	CCCFMAX 22P0F +-5% 50.0V NP0	-	Deleted	40432440		-	Deleted
CI67	15005530	CCCMIN 2P7F +-10% 50.0V NP0	-	Deleted	15005530		-	Deleted
CI68	15005530	CCCMIN 2P7F +-10% 50.0V NP0	-	Deleted	15005530		-	Deleted
DI50	16007510	D-TLP E7296(BA282) 35.0V	-	Deleted	-	Deleted	-	Deleted
DI51	16007510	D-TLP E7296(BA282) 35.0V	-	Deleted	67056701	STRAP 12.5 MM.	-	Deleted
DI52	16007510	D-TLP E7296(BA282) 35.0V	-	Deleted	-	Deleted	-	Deleted
DI60	16007510	D-TLP E7296(BA282) 35.0V	-	Deleted	-	Deleted	-	Deleted
DI62	70436540	D-SLP 1N4148 100.0V 150E-3A	-	Deleted	70436540	D-SLP 1N4148 100.0V 150E-3A	-	Deleted
II02	20165170	IC-LIN STV8225 1406 A0 00	-	Deleted	20165170	IC-LIN STV8225 1406 A0 00	-	Deleted
JI01	10113550	RCFMN 0 OHM +0% 100MI0W	-	Deleted	-	Deleted	-	Deleted
JI02	10113550	RCFMN 0 OHM +0% 100MI0W	-	Deleted	-	Deleted	-	Deleted
JI03	67056701	STRAP 12.5 MM.	-	Deleted	-	Deleted	-	Deleted
JI04	10113550	RCFMN 0 OHM +0% 100MI0W	-	Deleted	10113550	RCFMN 0 OHM +0% 100MI0W	-	Deleted
JI06	-	Deleted	-	Deleted	10113550	RCFMN 0 OHM +0% 100MI0W	-	Deleted
JI07	67056701	STRAP 12.5 MM.	-	Deleted	67056701	STRAP 12.5 MM.	-	Deleted
JI22	67056701	STRAP 12.5 MM.	-	Deleted	67056701	STRAP 12.5 MM.	-	Deleted
LI61	20510040	LA 7X7 32M4 HZ 100	-	Deleted	20510040	LA 7X7 32M4 HZ 100	-	Deleted
LI63	15040120	LF 3U9H +10% 1.6 OHM 200MI0A	15040180	LF 4U7H +10% 1.7 OHM	15040180	LF 4U7H +10% 1.7 OHM	13020600	LF 5U6H +10%
QI01	10095120	FILSW OFWG3965M 2104 A1	20232070	FILSW G3962M 2104 A2	20232070	FILSW G3962M	10095120	FILSW OFWG3965M 2104 A1
QI02	20489330	FILSW 33M9HZ LITHIUM	-	Deleted	20497040	FILSW L9362M	-	Deleted
QI31	20338160	FILCTRP 6M0 HZ 35DB 70K0HZ	20356510	FILCTRP 6M5 HZ	-	Deleted	20338160	FILCTRP 6M0 HZ 35DB 70K0HZ
QI34	20338170	FILCTRP 5M74 HZ 35DB 70K0HZ	20338170	FILCTRP 5M74 HZ 35DB 70K0HZ	20338170	FILCTRP 5M74 HZ 35DB 70K0HZ	-	Deleted
RH18	15033320	RCFMN 82K0 OHM +5% 100MI0W	-	Deleted	15033320	RCFMN 82K0 OHM +5% 100MI0W	-	Deleted
RI04	15032220	RCFMN 180R0 OHM +5% 100MI0W	15033190	RCFMN 68R0 OHM +5% 100MI0W	15032220	RCFMN 180R0 OHM +5% 100MI0W	15033190	RCFMN 68R0 OHM +5% 100MI0W
RI11	15032570	RCFMN 2K2R0 OHM +5% 100MI0W	-	Deleted	15031990	RCFMN 10K0 OHM +5% 100MI0W	-	Deleted
RI22	-	Deleted	15033090	RCFMN 5K6 OHM +5% 100MI0W	-	Deleted	15033090	RCFMN 5K6 OHM +5% 100MI0W
RI27	15033330	RCFMN 82R0 OHM +5% 100MI0W	15033330	RCFMN 82R0 OHM +5% 100MI0W	15031990	RCFMN 100R0 OHM +5% 100MI0W	15033330	RCFMN 82R0 OHM +5% 100MI0W
RI50	15033210	RCFMN 6K8 OHM +5% 100MI0W	-	Deleted	-	Deleted	-	Deleted
RI51	15006130	RCF 10K0 OHM +5% 250MI0W	-	Deleted	-	Deleted	-	Deleted
RI52	15031990	RCFMN 10K0 OHM +5% 100MI0W	-	Deleted	-	Deleted	-	Deleted
RI53	15032970	RCFMN 4K7 OHM +5% 100MI0W	-	Deleted	-	Deleted	-	Deleted
RI54	15032830	RCFMN 3K9 OHM +5% 100MI0W	-	Deleted	-	Deleted	-	Deleted
RI55	15032590	RCFMN 2K7 OHM +5% 100MI0W	-	Deleted	-	Deleted	-	Deleted
RI56	15032310	RCFMN 1K8 OHM +5% 100MI0W	-	Deleted	-	Deleted	-	Deleted
RI57	15031990	RCFMN 10K0 OHM +5% 100MI0W	-	Deleted	-	Deleted	-	Deleted
RI60	15032590	RCFMN 2K7 OHM +5% 100MI0W	-	Deleted	-	Deleted	-	Deleted
RI63	15032130	RCFMN 150K0 OHM +5% 100MI0W	-	Deleted	15032130	RCFMN 150K0 OHM +5% 100MI0W	-	Deleted
RI74	15033060	RCFMN 56K0 OHM +5% 100MI0W	10113550	RCFMN 0 OHM +0% 100MI0W	15033060	RCFMN 56K0 OHM +5% 100MI0W	10113550	RCFMN 0 OHM +0% 100MI0W
TI03	16007030	TR-SSD DTC144EK N	-	Deleted	-	Deleted	-	Deleted
TI04	16007030	TR-SSD DTC144EK N	-	Deleted	-	Deleted	-	Deleted
TI28	11070770	TR-SLPLF BC847B N 100E-3A 45V	-	Deleted	-	Deleted	-	Deleted
-	-	MAINS CORD (FTZ)		* MAINS CORD (NON-FTZ)		MAINS CORD (FTZ)		MAINS CORD (NON-FTZ)

* Note: FTZ power cord required for Quadra cabinet only.

*@ OPTION

DF21	10"-14" TO USE ZPD15V, 17"-21" TO USE ZPD20V
RI17/LI04	FOR STEREO BOARD
LV07	FOR CINCH BOARD ONLY
RF23	FOR 10" MODEL WITH DC/DC ONLY.
BR09 BR05 BR03	INSERT FOR CLK/RADIO OPTION
BA04/JA05	WITH BA04 DELETED JA05
JR50 JA25 TA05 DA05 CA14 CA08	DELETED WITH CLK/RADIO OPTION
BR01	OPTION FOR DOUBLE SCART
BR08	OPTION FOR PSN LED INDICATOR.
RR69	INSERT 1K FOR CLK/RADIO OPTION.
RR72	INSERTED 1K FOR CLK/RADIO OPTION.
LED-RED	ADD JK21
LED-BI COLOUR	ADD DK07, DK08, JK01, JK20, RK17, RK18, RK15, RK16 DELETED JK21.
LR02 LR05 RR44 RR45 CR19 CR20 CR21 CR22	FOR DETACHED KEYBOARD ONLY.
RA37	1K5 (FOR MONO WITH HEADPHONE ONLY)
	1K (FOR MONO WITHOUT HEADPHONE ONLY)
RP37	14", 17"TO USE 18K, 20", 21" TO USE 15K
DL09 JV00 CC21 JR07 CF01 CH17 RR01 RR14 CK04 BR06 BR07 RR08 RR09 CR01 CT58 CT06 CT76 CV08 DA01 JA02 NF02 RA20 RC23 RT50 CP72 CR13 RK10 CA22 DR06 RF34 RF31 TF31 RF32 RF33 RF35 TK01 CI06 RV45 RF63 RP50 DP51 DP50 CP50 RP51 RP54 BP50 JV08 CH17	TO BE DEFINE.
JK22	FOR DETACHED KEYBOARD ONLY (TTA)
CR72 CR71 RR71	FOR DOUBLE SCART ONLY
WITH BURST MODE	ADDED DP45 RP45 CP45 RP46 RP30 RP47 DP46 TP45 DP46.
WITH SMART PLUG	ADD BR10 RR97 RR90 CR92 CR93 RR98 RR95 RR93 RR94 RR99 DELETE D RR20.
WITHOUT SMART PLUG	ADD RR20 DELETED RR94 RR90 BR10 RR97 RR90 CR92 CR93 RR98 RR9 5 RR93.
IR01	FM 20 FOR MONO
	FS 20 FOR STEREO

DIFFERENCE BETWEEN SINGLE & DOUBLE SCART (STEREO)

POS.	S/SCART	D/SCART
BE01	SCART	21 WAY
BR01	DEL	3 WAY
RI30	27R	0R
RI31	75R	DEL
RV04	100R	12.5MM
RV05	75R	DEL
RV06	100R	12.5MM
RV07	75R	DEL
RV08	100R	12.5MM
RV09	75R	DEL
RV10	100R	12.5MM
RV11	75R	DEL
NF01	ASY TDA1771	ASY TDA1771 D/SCART
5040	DEL	ASY D/SCART
6000	DEL	3 WAY WIRE
6010	DEL	3 WAY WIRE
JR52	-	3.3uH
CI01	1N	390P
CI02	1N	390P
CI18	0R	150P
RI12	150P	-
RI13	150P	-
*CC01	0R	10N
*RC25	10N	33R
* FOR 15" TOWER MODEL ONLY		

LED INFORMATIONS FOR TX91G PRODUCTS

PROJECT	NOS.	161	364	373	393	465	469	469Z	612N	626	14" QUADRA	20" QUADRA	123	124R	220R	220Z	340R	372	393Z	618	21" QUADRA
RR70 LED BRIGHTNESS	RCF180R			X	X					X	X	X		X				X			X
LED SUPPORT (MKD1)	T#20 12 58 7A				X					X	X	X									
	T#20 38 20 60			X																	
	T#25 07 01 10																				
	T#40 48 05 50																				
LED POSITION	DKD1				X					X		X									
	DKD2										X										
	DKD3			X																	
	EXTERNAL													X				X			X
KEYBOARD		ATTACHED											DETACHED								

* TX91G (MONO) DIFFERENCES BETWEEN BGHILL`, BGDKK`, BG,L AND PAL I

POS.	TOCOM	BGHILL`	TOCOM	BGDKK`	TOCOM	BG,L	TOCOM	PAL I
CA07	15005750	CCCMIN 470P K 50V	15005590	CCCMIN 330P K 50V	15005750	CCCMIN 470P K 50V	15005590	CCCMIN 330P K 50V
CA09	15005620	CCCMIN 390P K 50V	15005590	CCCMIN 330P K 50V	15005620	CCCMIN 390P K 50V	15005590	CCCMIN 330P K 50V
CH01	13040160	CE 47U +20% 16V 85C	13082060	CE 10U +20% 50V 85C	13040160	CE 47U +20% 16V 85C	13082060	CE 10U +20% 50V 85C
CI10	15005190	CCCMIN 1N K 50V	-	DELETED	15005190	CCCMIN 1N K 50V	-	DELETED
CI11	15002130	CE 10U +20% 16V 85C	-	DELETED	15002130	CE 10U +20% 16V 85C	-	DELETED
CI12	15002560	CE 22U +20% 16V 85C	-	DELETED	15002560	CE 22U +20% 16V 85C	-	DELETED
CI13	15005390	CCCMIN 22N +80% -20% 25V	-	DELETED	15005390	CCCMIN 22N +80% -20% 25V	-	DELETED
CI14	15002130	CE 10U +20% 16V 85C	-	DELETED	15002130	CE 10U +20% 16V 85C	-	DELETED
CI15	15002130	CE 10U +20% 16V 85C	-	DELETED	15002130	CE 10U +20% 16V 85C	-	DELETED
CI31	15005760	CCCMIN 47P K 50V	15005630	CCCMIN 39P K 50V	15005760	CCCMIN 47P K 50V	15005760	CCCMIN 47P K 50V
CI35	-	-	11054120	CCCFMAX 100N	11054120	CCCFMAX 100N	11054120	CCCFMAX 100N
CI36	15005390	CCCMIN 22N +80% -20% 25V	15005390	CCCMIN 22N +80% -20% 25V	-	DELETED	-	DELETED
CI37	15005390	CCCMIN 22N +80% -20% 25V	15005390	CCCMIN 22N +80% -20% 25V	-	DELETED	-	DELETED
CI38	15005190	CCCMIN 1N K 50V	15005390	CCCMIN 22N +80% -20% 25V	-	DELETED	-	DELETED
CI52	11063520	CCCFMAX 39P J 50V	-	DELETED	-	DELETED	-	DELETED
CI53	11063520	CCCFMAX 39P J 50V	-	DELETED	-	DELETED	-	DELETED
CI60	15005770	CCCMIN 4N7 K 16V	-	DELETED	-	DELETED	-	DELETED
CI64	-	DELETED	15005770	CCCMIN 4N7 +20% -20% 16V	-	DELETED	-	DELETED
CI65	15005760	CCCMIN 47P J 50V	15005760	CCCMIN 47P J 50V	10113550	RCFMN 0R +0% 100MI0W	-	DELETED
CI66	40432440	CCCFMAX 22P J 50V	11063520	CCCFMAX 39P J 50V	15005150	CCCMIN 18P J 50V	-	DELETED
CI67	15005530	CCCMIN 2P7 K 50V	15005840	CCCMIN 6P8 K 50V	15005530	CCCMIN 2P7 K 50V	-	DELETED
CI68	15005530	CCCMIN 2P7 K 50V	15005840	CCCMIN 6P8 K 50V	15005530	CCCMIN 2P7 K 50V	-	DELETED
CR23	15005190	CCCMIN 1N K 50V	15005190	CCCMIN 1N K 50V	-	DELETED	-	DELETED
DI03	16007510	D-TLP E7296(BA282) 35V	16007510	D-TLP E7296(BA282)35V	-	DELETED	67056701	STRAP 0.6MM 4.5MM 12.5MM
DI04	16007510	D-TLP E7296(BA282) 35V	16007510	D-TLP E7296 (BA282) 35V	67056701	STRAP 0.6MM 4.5MM 12.5M	-	DELETED
DI50	16007510	D-TLP E7296(BA282) 35V	-	DELETED	-	DELETED	-	DELETED
DI51	16007510	D-TLP E7296(BA282) 35V	-	DELETED	67056701	STRAP 0.6MM 4.5MM 12.5M	-	DELETED
DI52	16007510	D-TLP E7296(BA282) 35V	-	DELETED	-	DELETED	-	DELETED
DI60	16007510	D-TLP E7296(BA282) 35V	16007510	D-TLP E7296(BA282) 35V	-	DELETED	-	DELETED
DI62	70436540	D-SLP 1N4148 100V 150E-3A	-	DELETED	70436540	D-SLP 1N4148 100V 150E-3A	-	DELETED
II02	20165170	IC-LIN STV8225 1406 A0	-	DELETED	20165170	IC-LIN STV8225 1406 A0	-	DELETED
JA12	-	DELETED	67056601	STRAP 0.6MM 4.5MM 10MM	-	DELETED	-	DELETED
JI01	10113550	RCFMN 0R +0% 100MI0W	-	DELETED	-	DELETED	-	DELETED
JI02	10113550	RCFMN 0R +0% 100MI0W	-	DELETED	-	DELETED	-	DELETED
JI03	67056701	STRAP 0.6MM 4.5MM 12.5MM 100MI0W	-	DELETED	-	DELETED	-	DELETED
JI04	10113550	RCFMN 0R +0% 100MI0W	-	DELETED	10113550	RCFMN 0R +0% 100MI0W	-	DELETED
JI06	-	DELETED	-	DELETED	10113550	RCFMN 0R +0% 100MI0W	-	DELETED
JI07	67056601	STRAP 0.6MM 4.5MM 10MM	-	DELETED	67056601	STRAP 0.6MM 4.5MM 10MM	-	DELETED
JI12	67056701	STRAP 0.6MM 4.5MM 12.5MM	67056701	STRAP 0.6MM 4.5MM 12.5MM	-	DELETED	-	DELETED
JI13	67056701	STRAP 0.6MM 4.5MM 12.5MM	67056701	STRAP 0.6MM 4.5MM 12.5MM	-	DELETED	-	DELETED
JI22	67056601	STRAP 0.6MM 4.5MM 10MM	-	DELETED	67056601	STRAP 0.6MM 4.5MM 10MM	-	DELETED
JI24	-	DELETED	10113550	RCFMN 0R +0% 100MI0W	-	DELETED	10113550	RCFMN 0R +0% 100MI0W
JI25	-	DELETED	10113550	RCFMN 0R +0% 100MI0W	-	DELETED	10113550	RCFMN 0R +0% 100MI0W
JI36	-	DELETED	10113550	RCFMN 0R +0% 100MI0W	-	DELETED	10113550	RCFMN 0R +0% 100MI0W
JI37	-	DELETED	10113550	RCFMN 0R +0% 100MI0W	-	DELETED	10113550	RCFMN 0R +0% 100MI0W
JR10	-	DELETED	67057101	STRAP 0.6MM 4.5MM 17.5MM	-	DELETED	-	DELETED
JR31	10113550	RCFMN 0R +0% 100MI0W	10113550	RCFMN 0R +0% 100MI0W	-	DELETED	-	DELETED
JR35	-	DELETED	10113550	RCFMN 0R +0% 100MI0W	-	DELETED	-	DELETED
JR47	67056601	TRAP 0.6MM 4.5MM 10MM	67056601	TRAP 0.6MM 4.5MM 10MM	-	DELETED	-	DELETED
LI61	20510040	LA 7X7 32M4 HZ 100	20382370	LA 7X7 29M05 HZ 2602 A0	20510040	LA 7X7 32M4 HZ 100	-	DELETED
LI63	15040180	LF 4U7H +10%	13020600	LF 5U6 +10%	15040180	LF 4U7H +10%	15040180	LF 4U7H +10%
QI01	10247670	FILSW OFWG 1967M 2104 A1	20256810	FILSW K2955M 2104 A1	20013180	FILSW OFWG 1960	20232060	FILSWJ1952
QI02	20489330	FILSW 33M9HZ LITHIUM NIOBATE	-	DELETED	20497040	L3962M	-	DELETED
QI31	20338160	FILCTRP 6M HZ 35DB 70K0HZ	20356510	FILTRP 6M5 HZ 35DB 70K HZ	-	DELETED	20338160	FILCTRP 6M HZ 35DB 70K0HZ
QI32	20336430	FILC 5M5 HZ 680R 50K HZ	20336430	FILC 5M5 HZ 680R 50K HZ	20336430	FILC 5M5 HZ 680R 50K HZ	-	DELETED
QI33	20338150	FILC 6M HZ 470R 50K HZ	20356470	FILC 6M5 HZ 470R 50K HZ	-	DELETED	20338150	FILC 6M HZ 470R 50K HZ
QI34	20338170	FILCTRP 5M74 HZ 30DB 70K HZ	20338170	FILCTRP 5M74 HZ 30DB 70K HZ	20338170	FILCTRP 5M74 HZ 30DB 70K HZ	-	DELETED
RH18	15033320	RCFMN 82K 0R +5% 100MI0W	-	DELETED	15033320	RCFMN 82K 0R +5% 100MI0W	-	DELETED
RI04	15032220	RCFMN 180R +5% 100MI0W	15033190	RCFMN 68R +5% 100MI0W	15032220	RCFMN 180R +5% 100MI0W	15033190	RCFMN 68R +5% 100MI0W
RI11	15032570	RCFMN 2K2 +5% 100MI0W	-	DELETED	15031990	RCFMN 10K +5% 100MI0W	-	DELETED
RI22	-	DELETED	15033090	RCFMN 5K6 +5% 100MI0	-	DELETED	15033090	RCFMN 5K6 +5% 100MI0
RI27	15031990	RCFMN 100R +5% 100MI0W	15033330	RCFMN 82R +5% 100MI0W	15031990	RCFMN 100R +5% 100MI0W	15033330	RCFMN 82R +5% 100MI0W
RI32	15032250	RCFMN 1K +5% 100MI0W	15032250	RCFMN 1K +5% 100MI0W	15031990	RCFMN 10K +5% 100MI0W	15031990	RCFMN 10K +5% 100MI0W
RI33	15032310	RCFMN 1K8 +5% 100MI0W	15032310	RCFMN 1K8 +5% 100MI0W	-	DELETED	-	DELETED
RI35	15032970	RCFMN 4K7 +5% 100MI0W	15032970	RCFMN 4K7 +5% 100MI0W	-	DELETED	-	DELETED
RI38	15032310	RCFMN 1K8 5% 100MI0W	15032310	RCFMN 1K8 5% 100MI0W	-	DELETED	-	DELETED
RI47	15032970	RCFMN 4K7 +5% 100MI0W	15032970	RCFMN 4K7 +5% 100MI0W	-	DELETED	-	DELETED
RI50	15033210	RCFMN 6K8 +5% 100MI0W	-	DELETED	-	DELETED	-	DELETED
RI51	15006130	RCF 10K +5% 250MI0W	-	DELETED	-	DELETED	-	DELETED
RI52	15031990	RCFMN 10K +5% 100MI0W	-	DELETED	-	DELETED	-	DELETED
RI53	15032970	RCFMN 4K7 +5% 100MI0W	-	DELETED	-	DELETED	-	DELETED
RI54	15032830	RCFMN 3K9 +5% 100MI0W	-	DELETED	-	DELETED	-	DELETED
RI55	15032590	RCFMN 2K7 +5% 100MI0W	-	DELETED	-	DELETED	-	DELETED
RI56	15032310	RCFMN 1K8 +5% 100MI0W	-	DELETED	-	DELETED	-	DELETED
RI57	15031990	RCFMN 10K +5% 100MI0W	-	DELETED	-	DELETED	-	DELETED
RI60	15032590	RCFMN 2K7 +5% 100MI0W	10113550	RCFMN 0R +0% 100MI0W	-	DELETED	-	DELETED
RI62	-	DELETED	15032590	RCFMN 2K7 +5% 100MI0W	-	DELETED	-	DELETED
RI63	15032130	RCFMN 150K +5% 100MI0W	`15032130	RCFMN 150K +5% 100MI0W	15032130	RCFMN 150K +5% 100MI0W	-	DELETED
RI70	-	DELETED	15032590	RCFMN 2K7 +5% 100MI0W	-	DELETED	-	DELETED
RI71	-	DELETED	15032590	RCFMN 2K7 +5% 100MI0W	-	DELETED	-	DELETED
RI72	-	DELETED	15032830	RCFMN 3K9 +5% 100MI0W	-	DELETED	-	DELETED
RI74	15033060	RCFMN 56K +5% 100MI0W	10113550	RCFMN 0R +0% 100MI0W	15033060	RCFMN 56K +5% 100MI0W	10113550	RCFMN 0R +0% 100MI0W
RR20	15006100	RCF 100R +5% 250MI0W	15006100	RCF 100R +5% 250MI0W	-	DELETED	-	DELETED
TI02	-	DELETED	16006290	TR-SLPLF BC858B N 100MIMA 30V	-	DELETED	-	DELETED
TI03	16007030	TR-SSD DTC144EK N	-	DELETED	-	DELETED	-	DELETED
TI04	16007030	TR-SSD DTC144EK N	-	DELETED	-	DELETED	-	DELETED
TI28	16006290	TR-SLPLF BC848B N 100MI0W	-	DELETED	-	DELETED	-	DELETED
TI30	16007030	TR-SSD DTC144EK N	16007030	TR-SSD DTC144EKN	16007030	TR-SSD DTC144EKN	-	DELETED

TX91G-COMPONENTS MATCHING FOR DST(SAMSUNG OR OREGA)ACCORDING TO SCREEN SIZE (14" TO 21")

SCREEN SIZE	14"(TTT)	14"(TTT)	14"(TTT)	14"(TTT)	14"(TTA)	17"(TTA)	17"(TTA)	20"(TTT)	20"(TTA)
TUBE TUBE REF. TOCOM	THAI-CRT A34JXV70X(TUBEBARE) 20 33 03 50	CHUNG HWA 370KRB22-TC38 11 00 09 33(NT)	CHUNG HWA 370KRB22-TC36 11 00 09 33(NT)	POLKOLOR A34EFU13X01 20 30 44 00 A34EFU33X01 20 67 83 30	POLKOLOR A34EFU13X01 20 30 44 00 A34EFU33X01 20 67 83 30	PHILIPS A41EAM40X01 10 14 00 30	PHILIPS A41EAM40X01 10 14 00 30	POLKOLOR A48EEV13X01 20 25 30 30	POLKOLOR A48EEV13X01 20 25 30 30
LL05(FBT) TOCOM	FCV-1410-E18 20 20 28 00	FCV-1410-E18 20 20 28 00	OREGA DST(L27)* 20383270(203832H0) 20452970(204529H0_P1) 20453000(95603-00)	FCV-1410-E18 20 20 28 00	OREGA DST(L27) PHI/MUR FOCUS BLK 20 60 83 50	FCV-1410-E18 20 20 28 00	OREGA DST(L27) 20 56 29 00 ASSEMBLE STRIPPED END	FCV-2010E07 20 32 83 00	OREGA DST(L28)* L28 PHI /MUR FOCUS 20 60 83 60
ML03 TOCOM	FBT CLIP 40 26 17 0B	FBT CLIP 40 26 17 0B	FBT CLIP 20 46 55 4A	FBT CLIP 40 26 17 0B	FBT CLIP 40 26 17 0B	FBT CLIP 40 26 17 0B	FBT CLIP 40 26 17 0B	FBT CLIP 40 26 17 0B	FBT CLIP 40 26 17 0B
ML05 TOCOM	-	-	RUBBER STUB 20 08 97 30	-	-	-	-	-	-
LL03(LIN. COIL) TOCOM	LL 90uH 30 90 90 08	LL 90uH 30 90 90 08	LL 90uH 30 90 90 08	LL 58uH 80 36 75 00	LL 58uH 80 36 75 00	LL 112uH 90 23 80 00	LL 112uH 90 23 80 00	LL 58uH 80 36 75 00	LL 58uH 80 36 75 00
CL04(TUN.CAP) TOCOM	CFS 8N5 1K6V 11 03 07 32	CFS 7N 1K5V 43 32 67 00	CFS 7N 1K5V 43 32 67 00	CFS 8N6 1K6V 80 30 47 00	CFS 8N5 1K6V 11 03 07 32	CFS 8N5 1K6V 11 03 07 32	CFS 8N5 1K6V 11 03 07 32	CFS 7N 1K5V 43 32 67 00	CFS 8N2 1K6V 60 06 22 00
CL18 TOCOM	-	CC 270P 2KV K 14 03 60 00	CC 270P 2KV K 14 03 60 00	CC 100P 2KV 14 00 63 10	CC 470P 3KV 14 00 60 50	CC 220P 2KV 14 03 62 90	CC 220P 2KV 14 03 62 90	-	-
CL05(S.CAP) TOCOM	CFS 390N 250V 20 05 31 00	CFS 390N 250V 20 05 31 00	CFS 390N 250V 20 05 31 00	CFS 390N 250V 20 05 31 00	CFS 390N 250V 20 05 31 00	CFS 390N 250V 20 05 31 00	CFS 390N 250V 20 05 31 00	CFS 470N 250V 43 04 43 00	CFS 470N 250V 43 04 43 00
RL09 TOCOM	RW 8R2 K 7W 70 43 26 30	RW 8R2 K 7W 70 43 26 30	RW 8R2 K 7W 70 43 26 30	RW 8R2 K 7W 70 43 26 30	RW 8R2 K 7W 70 43 26 30	RW 10R K 5W 20 52 55 60	RW 10R K 5W 20 52 55 60	RW 8R2 K 7W 70 43 26 30	RW 8R2 K 7W 70 43 26 30
RL22 TOCOM	RMF 91K 0.7W 1% 20 67 31 00	RMF 82K5 0.7W 1% 10 22 49 20	RMF 82K5 0.7W 1% 10 22 49 20	RMF 75K 0.7W 1% 10224620	RMF 75K 0.7W 1% 10 22 46 20	RMF 75K 0.7W 1% 10 22 46 20	RMF 75K 0.7W 1% 10 22 46 20	RMF 75K 0.7W 1% 10 22 46 20	RMF 75K 0.7W 1% 10 22 46 20
RL12 TOCOM	RCFF 0.56R 0.5W J 20 32 23 30	RCFF 0.56R 0.5W J 20 32 23 30	RCFF 0.56R 0.5W J 20 32 23 30	RCFF 0.22R 0.5W J 13 05 51 00	RCFF 0.22R 0.5W J 13 05 51 00	RCFF 1R5 0.5W J 13 00 83 00	RCFF 1R5 0.5W J 13 00 83 00	RCFF 0.56R 0.5W J 20 32 23 30	RCFF 0.56R 0.5W J 20 32 23 30
RL13 TOCOM	RCFF 0.56R 0.5W J 20 32 23 30	RCFF 0.56R 0.5W J 20 32 23 30	RCFF 0.56R 0.5W J 20 32 23 30	RCFF 1R 0.5W J 15 05 02 70	RCFF 0.22R 0.5W J 13 05 51 00	RCFF 0.56R 0.5W J 20 32 23 30	RCFF 0.56R 0.5W J 20 32 23 30	RCFF 0.22R 0.5W J 13 05 51 00	RCFF 0.22R 0.5W J 13 05 51 00
RL14/JL12 TOCOM	RCFF 1R5 0.5W J 15 05 03 10	RCFF 1R5 0.5W J 15 05 03 10	STRAP 5MM 67 05 60 01	RCFF 0.22R 0.5W J 13 05 51 00	RCFF 0.22R 0.5W J 13 05 51 00	RCFF 0.22R 0.5W J 13 05 51 00	RCFF 0.22R 0.5W J 13 05 51 00	RCFF 0.22R 0.5W J 13 05 51 00	RCFF 0.22R 0.5W J 13 05 51 00
RF09 TOCOM	RMF 100K 0.25W 1% 50 88 38 10	RMF 100K 0.25W 1% 50 88 38 10	RMF 100K 0.25W 1% 50 88 38 10	RMF 100K 0.25W 1% 50 88 38 10	RMF 100K 0.25W 1% 50 88 38 10	RMF 121K 0.25W 1% 30 94 05 20	RMF 121K 0.25W 1% 30 94 05 20	RMF 121K 0.25W 1% 30 94 05 20	RMF 121K 0.25W 1% 30 94 05 20
CRT(INTEGRATED PCB) MAIN PCB(A900)	7 TR CRT VERSION 20 57 86 70	7 TR CRT VERSION 20 57 86 70	7 TR CRT VERSION 20 57 86 70	7 TR CRT VERSION 20 57 86 70	IC CRT VERSION 25 22 60 70	IC CRT VERSION 25 22 60 70	IC CRT VERSION 25 22 60 70	-	IC CRT VERSION 25 22 60 70
CRT MODULE	-	-	-	-	-	-	-	TV COMB CRT-10 TR 20 63 90 90	-
UB @MIN I BEAM	107V	108V	108V	104V	104V	112V	112V	115V	115V

SCREEN SIZE	20"(TTT)	20"(TTT)	21"(TTA)	21"(TTA)	21"(TTA)	21"(TTT)	21"(TTT)	21"(TTT)
TUBE TUBE REF. TOCOM	CHUNGHWA 510UFB22-TC55(DPY) 20 16 97 90-NT	CHUNGHWA 510UFB22-TC55(DPY) 20 16 97 90-NT	HITACHI A51JSY61X03 10 30 26 00	VIDEOCOLOR A51EFS43X101(OT) 20 35 51 10	VIDEOCOLOR A51EBV13X01(MP) 10 31 80 20	TOSHIBA A51KSV40X02(M) 20 56 43 80	CHUNGHWA A51AEZ43X02 20 50 69 30	HITACHI A51JSY61X03
LL05(FBT) TOCOM	FCV-2010E07 20 32 83 00	OREGA DST(L28) 20 62 68 00(ASSEMBLE)	OREGA DST(L28)* 20383280(20383210) 20452960(20452960_P1) 20453090(95604-00)	OREGA DST(L28-OT)** L 28 VC OT 20 60 83 90	OREGA DST(L28) 20383280(20383210-P2)	FCV-2010E07 20 32 83 00	FCV-2010E07 20 32 83 00	FCV-2010E07 20 32 83 00
ML03 TOCOM	FBT CLIP 40 26 17 0B	FBT CLIP 20 46 55 4A	FBT CLIP 20 46 55 4A	FBT CLIP 40 26 17 0B	20 46 55 4A	FBT CLIP 40 26 17 0B	FBT CLIP 40 26 17 0B	FBT CLIP 40 26 17 0B
ML05 TOCOM	-	RUBBER STUB 20 08 97 30	RUBBER STUB 20 08 97 30	-	RUBBER STUB 20 08 97 30	-	-	-
LL03(LIN. COIL) TOCOM	LL 58uH 80 36 75 00	LL 58uH 80 36 75 00	LL 58uH 80 36 75 00	LL 58uH 80 36 75 00	LL 58uH 80 36 75 00	LL 58uH 80 36 75 00	LL 58uH 80 36 75 00	LL 58uH
CL04(TUN.CAP) TOCOM	CFS 7N8 1K5V 3.5% 43 46 42 00	CPP 8N8 1K6V 43 41 60 00	CFS 8N 1K5V 43 45 68 00	CFS 7N 1K6V +-3.5% 43 32 67 00	CFS 7N2 1K6V +-3.5% 20 15 34 70	CFS 7N 1K6V +-3.5% 43 32 67 00	CFS 6N 1K6V 3.5% 20 50 78 10	CFS 6N 1K6V 3.5% 20 50 78 10
CL18 TOCOM	CC 330P 3KV 14 03 48 30	CC 270P 2KV K 14 03 60 00	-	CC 680P 3KV 20 24 84 10	-	CC 330P 3KV 14 03 48 30	CC 330P 3KV 14 03 48 30	CC 330P 3KV 14 03 48 30
CL05(S.CAP) TOCOM	CFS 470N 250V 43 04 43 00	CFS 470N 250V 43 04 43 00	CFS 470N 250V 43 04 43 00	CFS 360N 250V 43 44 15 00	CFS 470N 250V 43 04 43 00	CFS 360N 250V 43 44 15 00	CFS 360N 250V 43 44 15 00	CFS 360N 250V 43 44 15 00
RL09 TOCOM	RW 8R2 K 7W 70 43 26 30	RW 8R2 K 7W 70 43 26 30	RW 8R2 K 7W 70 43 26 30	RW 8R2 K 7W 70 43 26 30	RW 8R2 K 7W 70 43 26 30	RW 8R2 K 7W 70 43 26 30	RW 8R2 K 7W 70 43 26 30	RW 8R2 K 7W 70 43 26 30
RL22 TOCOM	RMF 82K 0.7W 1% 10 14 83 10	RMF 82K 0.7W 1% 10 14 83 10	RMF 82K5 0.7W 1% 10 22 49 20	RMF 82K 0.7W 1% 10 14 83 10	RMF 82K5 0.7W 1% 10 22 49 20	RMF 82K 0.7W 1% 10 14 83 10	RMF 82K 0.7W 1% 10 14 83 10	RMF 82K 0.7W 1% 10 14 83 10
RL12 TOCOM	RCFF 0.68R 0.5W J 10 16 00 20	RCFF 1R 0.5W J 15 00 97 40	RCFF 0.56R 0.5W J 20 32 23 30	RCFF 0.22R 0.5W J 13 05 51 00	RCFF 0.47R 0.5W J 10 16 01 40	RCFF 0.82R 0.5W K 20 67 85 80	RCFF 0.82R 0.5W K 20 67 85 80	RCFF 0.82R 0.5W K 20 67 85 80
RL13 TOCOM	RCFF 0.22R 0.5W J 13 05 51 00	RCFF 0.22R 0.5W J 13 05 51 00	RCFF 0.22R 0.5W J 13 05 51 00	RCFF 0.22R 0.5W J 13 05 51 00	RCFF 0.22R 0.5W J 13 05 51 00	RCFF 0.22R 0.5W J 13 05 51 00	RCFF 0.22R 0.5W J 13 05 51 00	RCFF 0.22R 0.5W J 13 05 51 00
RL14/JL12 TOCOM	RCFF 2R7 0.5W J 15 05 03 70	RCFF 2R7 0.5W J 15 05 03 70	RCFF 0.22R 0.5W J 13 05 51 00	RCFF 0.22R 0.5W J 13 05 51 00	RCFF 0.22R 0.5W J 13 05 51 00	RCFF 0.22R 0.5W J 13 05 51 00	RCFF 0.22R 0.5W J 13 05 51 00	
RF09 TOCOM	RMF 121K 0.25W 1% 30 94 05 20	RMF 121K 0.25W 1% 30 94 05 20	RMF 140K 0.25W 1% 80 43 78 30	RMF 140K 0.25W 1% 80 43 78 30	RMF 110K 0.25W 1% 11 06 12 10	RMF 140K 0.25W 1% 80 43 78 30	RMF 110K 0.25W 1% 11 06 12 10	RMF 121K 0.25W 1% 30 94 05 20
CRT(INTEGRATED PCB) MAIN PCB(A900)	-	-	IC CRT VERSION 25 22 60 70	IC CRT VERSION 25 22 60 70	IC CRT VERSION 25 22 60 70	-	-	-
CRT MODULE	TV COMB CRT-10 TR 20 63 90 90	TV COMB CRT-10 TR 20 63 90 90	-	-	-	TV COMB CRT 10 TR 20 63 90 90	TV COMB CRT 10 TR 20 63 90 90	TV COMB CRT 10 TR 20 63 90 90
UB @MIN I BEAM	116V	116V	116V	116V	116V	116V	116V	116V

THE DIFFERENCES BETWEEN MAIN PB ATTACHED KEYBOARD AND DETACHED KEYBOARD ARE AS FOLLOWS:

	MAIN PCB WITH ATTACHED KEYBOARD		ASY MAIN PB DETACHED KEYBOARD	
POS.	TOCOM	STRUCTURED NAME	TOCOM	STRUCTURED NAME
A900	25 22 60 70	PCB TX91G MAIN-IC VERSION	25 22 60 70	PCB TX91G MAIN-IC VERSION
BP01	10 45 16 70	PIN-SOLDER 1.3MM 6MM 3075 A0	-	DELETED
BP01	10 23 81 10	RAW CONNECTOR HOUSING	-	DELETED
BP03	-	DELETED	10 45 16 70	PIN-SOLDER 1.3MM 6MM 3075 A0
BP03	-	DELETED	10 23 81 10	RAW CONNECTOR HOUSING
BR02	-	DELETED	80 44 00 00	CONN 2.5MM 12MA ST NAT 00
CK03	13 07 04 70	CE 4U7 +20% 16V 85C	-	DELETED
CR19	-	DELETED	15 00 53 00	CCCMIN 220P K 50V
CR20	-	DELETED	15 00 53 00	CCCMIN 220P K 50V
CR21	-	DELETED	15 00 53 00	CCCMIN 220P K 50V
CR22	-	DELETED	15 00 53 00	CCCMIN 220P K 50V
DK01	16 01 04 30	D-LEM MV5491A RED/GN	-	DELETED
DK01	40 40 05 50	HOLDER LED (MD/SD/PD)	-	DELETED
DK07	50 80 06 50	D-ZENER BZX55C6V8 6.8V 500MI0W	-	DELETED
DK08	70 43 65 40	D-SLP 1N4148 100V 150E-3A	-	DELETED
IK01	10 13 24 10	IC-SP TFMK1330T PHOTO-MODULE 2737 A0	-	DELETED
JK01	67 05 67 01	STRAP 0.6MM 4.5MM 12.5MM 1035 A0	-	DELETED
JK04	67 05 67 01	STRAP 0.6MM 4.5MM 12.5MM 1035 A0	-	DELETED
JK07	67 05 70 01	STRAP 0.6MM 4.5MM 15MM 1035 A0	-	DELETED
JK09	67 05 70 01	STRAP 0.6MM 4.5MM 15MM 1035 A0	-	DELETED
JK11	67 05 70 01	STRAP 0.6MM 4.5MM 15MM 1035 A0	-	DELETED
JK12	67 05 70 01	STRAP 0.6MM 4.5MM 15MM 1035 A0	-	DELETED
JK13	67 05 70 01	STRAP 0.6MM 4.5MM 15MM 1035 A0	-	DELETED
JK22	-	DELETED	67 05 67 01	STRAP 0.6MM 4.5MM 12.5MM 1035 A0
RK11	15 00 72 60	RCF 220R +5% 250MI0W	-	DELETED
RR44	-	DELETED	15 03 29 30	RCFMN 470R +5% 100MI0W +500PPM
RR45	-	DELETED	15 03 29 30	RCFMN 470R +5% 100MI0W +500PPM
LR02	67 05 67 01	STRAP 0.6MM 4.5MM 12.5MM	15 04 03 30	LF 6U8H +10%
LR05	67 05 67 01	STRAP 0.6MM 4.5MM 12.5MM	15 04 03 40	LF 6U8H +10%
SK01	10 45 33 70	DUAL TACT SWITCH	-	DELETED
SK02	-	DELETED	-	DELETED
SK03	10 45 33 70	DUAL TACT SWITCH	-	DELETED
SK04	-	DELETED	-	DELETED
SP05	20 61 23 90	SWITCH-MAIN PUSH 250V 4A 2T 2P MSB4001 3004 A1	-	DELETED

LOCATION OF CONTROLS - EMPLACEMENT DES REGLAGES - SERVICE LAGEPLAN - POSIZIONE REGULATORI DI SERVIZIO - SITUACIÓN DE LOS AJUSTES

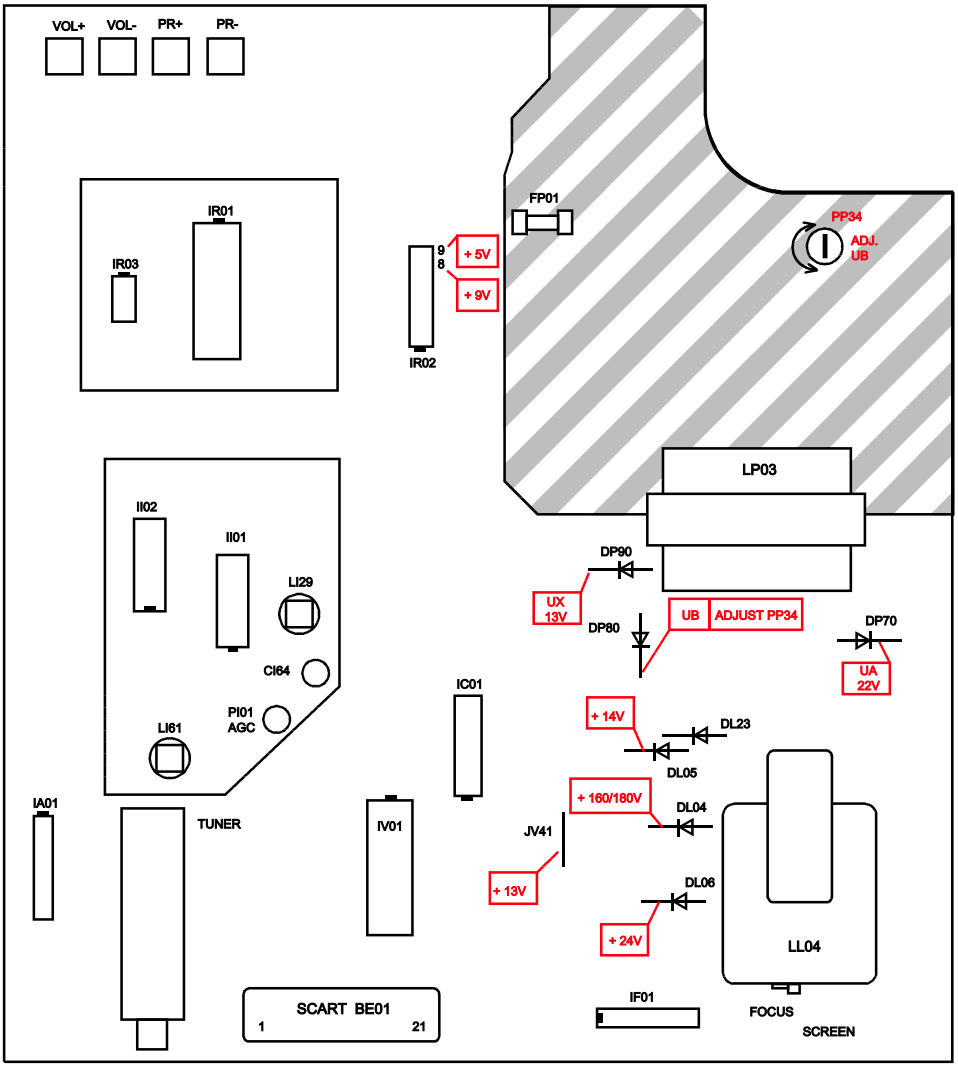

ADJUSTMENTS - REGLAGES - EINSTELLUNGEN - REGOLAZIONE - AJUSTES

U B — PP 34 — Contrast, brightness and volume to minimum — DP 80 — YP07

Screen Size	CRT Vendor / Type N°	FBT Vendor / Type N°	Min beam current UB adjustment
10"	Samsung 27GDC85X-TC10	Samsung FCV1010-E03	106V+/-0,5V
14"	Thai-CRT (baretube) A34JXV70X	Samsung FCV1410-E18	107V+/-0,5V
	ChungHwa 370KRB22-TC38	Samsung FCV1410-E18	108V+/-0,5V
		Orega 203832HO 204529H0 P1 *G5603-03	108V+/-0,5V
	Polkolor A34EFU13X91	Samsung FCV1410-E18	104V+/-0,5V
		Orega 203832HO 204529Ho P1 *G5603-03	104V+/-0,5V
17"	Philips A41EAM40X01	Samsung FCV1410-E18	110V+/-0,5V
		Orega 203832HO 204529H0 P1 *G5603-00	110V+/-0,5V

Screen Size	CRT Vendor / Type N°	FBT Vendor / Type N°	Min beam current UB adjustment
20"	Polkolor A48EEV13X01	Samsung FCV2010-E07	115V+/-0,5V
		Orega 203832IO 204529G0 P1 *G5604-00	115V+/-0,5V
	ChungHwa 510UFB22-TC55	Samsung FCV2010-E07	116V+/-0,5V
		Orega 203832IO 204529G0 P1 *G5604-00	116V+/-0,5V
21"	Hitachi A51JSY61X03	Samsung FCV2010-E07	116V+/-0,5V
		Orega 203832IO 204529G0 P1 *G5604-00	116V+/-0,5V
21"	VideoColor A51EBV13X01	Orega 203832IO 204529G0 P1 *G5604-00	116V+/-0,5V
	VideoColor A51EFS43X191	Orega *G5552-00 *G5624-00 *G5605-00	

TX91G-COMPONENTS MATCHING FOR DST(SAMSUNG OR OREGA)ACCORDING TO SCREEN SIZE (14" TO 21")

SCREEN SIZE	14"(TTT)	14"(TTT)	14"(TTT)	14"(TTT)	14"(TTA)	17"(TTA)	17"(TTA)	20"(TTT)	20"(TTA)	20"(TTT)	20"(TTT)	21"(TTA)	21"(TTA)	21"(TTA)	21"(TTT)	21"(TTT)	21"(TTT)
TUBE TUBE REF. TOCOM	THAI-CRT A34JXV70X(TUBEBARE) 20 33 03 50	CHUNG HWA 370KRB22-TC38 11 00 69 33(NT)	CHUNG HWA 370KRB22-TC38 11 00 69 33(NT)	POLKOLOR A34EFU13X91 20 30 44 00 A34EFU33X91 20 67 83 30	POLKOLOR A34EFU13X91 20 30 44 00 A34EFU33X91 20 67 83 30	PHILIPS A41EAM40X01 10 14 80 30	PHILIPS A41EAM40X01 10 14 80 30	POLKOLOR A48EEV13X01 20 25 30 30	POLKOLOR A48EEV13X01 20 25 30 30	CHUNGHWA 510UFB22-TC55(DPY) 20 16 97 90-NT	CHUNGHWA 510UFB22-TC55(DPY) 20 16 97 90-NT	HITACHI A51JSY61X03 10 30 28 00	VIDEOCOLOR A51EFS43X191(OT) 20 35 51 10	VIDEOCOLOR A51EBV13X01(MP) 10 31 89 20	TOSHIBA A51KSV40X02(M) 20 56 43 80	CHUNGHWA A51AEZ43X02 20 50 69 30	HITACHI A51JSY61X03
LL05(FBT) TOCOM	FCV-1410-E18 20 20 28 80	FCV-1410-E18 20 20 28 80	OREGA DST(L27)* 20383270(203832HO) 20452970(204529HO_P1) 20453080(G5603-00)	FCV-1410-E18 20 20 28 80	OREGA DST(L27) PHI/MUR FOCUS BLK 20 60 83 50	FCV-1410-E18 20 20 28 80	OREGA DST(L27) 20 58 29 60 ASSEMBLE STRIPPED END	FCV-2010E07 20 32 83 00	OREGA DST(L28)* L28 PHI /MUR FOCUS 20 60 83 60	FCV-2010E07 20 32 83 00	OREGA DST(L28) 20 52 68 00(ASSEMBLE)	OREGA DST(L28)* 20383280(203832IO) 20452960(204529GO_P1) 20453090(G5604-00)	OREGA DST(L28-OT)** L 28 VC OT 20 60 83 90	OREGA DST(L28) 20383280(203832IO-P2)	FCV-2010E07 20 32 83 00	FCV-2010E07 20 32 83 00	FCV-2010E07 20 32 83 00
ML03 TOCOM	FBT CLIP 40 26 17 0B	FBT CLIP 40 26 17 0B	FBT CLIP 20 46 55 4A	FBT CLIP 40 26 17 0B	FBT CLIP 40 26 17 0B	FBT CLIP 40 26 17 0B	FBT CLIP 40 26 17 0B	FBT CLIP 40 26 17 0B	FBT CLIP 40 26 17 0B	FBT CLIP 40 26 17 0B	FBT CLIP 20 46 55 4A	FBT CLIP 20 46 55 4A	FBT CLIP 40 26 17 0B	20 46 55 4A	FBT CLIP 40 26 17 0B	FBT CLIP 40 26 17 0B	FBT CLIP 40 26 17 0B
ML05 TOCOM	-	-	RUBBER STUB 20 08 97 30	-	-	-	-	-	-	-	RUBBER STUB 20 08 97 30	RUBBER STUB 20 08 97 30	-	RUBBER STUB 20 08 97 30	-	-	-
LL03(LIN. COIL) TOCOM	LL 90uH 30 90 99 08	LL 90uH 30 90 99 08	LL 90uH 30 90 99 08	LL 58uH 80 36 75 00	LL 58uH 80 36 75 00	LL 112uH 90 23 80 00	LL 112uH 90 23 80 00	LL 58uH 80 36 75 00	LL 58uH 80 36 75 00	LL 58uH 80 36 75 00	LL 58uH 80 36 75 00	LL 58uH 80 36 75 00	LL 58uH 80 36 75 00	LL 58uH 80 36 75 00	LL 58uH 80 36 75 00	LL 58uH 80 36 75 00	LL 58uH
CL04(TUN.CAP) TOCOM	CFS 6N5 1K6V 11 03 97 32	CFS 7N 1K5V 43 32 67 00	CFS 7N 1K5V 43 32 67 00	CFS 6N6 1K6V 80 30 47 00	CFS 6N5 1K6V 11 03 97 32	CFS 6N5 1K6V 11 03 97 32	CFS 6N5 1K6V 11 03 97 32	CFS 7N 1K5V 43 32 67 00	CFS 8N2 1K6V 60 06 22 00	CFS 7N8 1K5V 3.5% 43 46 42 00	CPP 8N8 1K6V 43 41 60 00	CFS 8N 1K5V 43 45 68 00	CFS 7N 1K6V +-3.5% 43 32 67 00	CFS 7N2 1K6V +-3.5% 20 15 34 70	CFS 7N 1K6V +-3.5% 43 32 67 00	CFS 6N 1K6V 3.5% 20 59 78 10	CFS 6N 1K6V 3.5% 20 59 78 10
CL18 TOCOM	-	CC 270P 2KV K 14 03 60 00	CC 270P 2KV K 14 03 60 00	CC 100P 2KV 14 00 63 10	CC 470P 3KV 14 00 60 50	CC 220P 2KV 14 03 62 90	CC 220P 2KV 14 03 62 90	-	-	CC 330P 3KV 14 03 48 30	CC 270P 2KV K 14 03 60 00	-	CC 680P 3KV 20 24 84 10	-	CC 330P 3KV 14 03 48 30	CC 330P 3KV 14 03 48 30	CC 330P 3KV 14 03 48 30
CL05(S.CAP) TOCOM	CFS 390N 250V 20 05 31 00	CFS 390N 250V 20 05 31 00	CFS 390N 250V 20 05 31 00	CFS 390N 250V 20 05 31 00	CFS 390N 250V 20 05 31 00	CFS 390N 250V 20 05 31 00	CFS 390N 250V 20 05 31 00	CFS 470N 250V 43 04 43 00	CFS 470N 250V 43 04 43 00	CFS 470N 250V 43 04 43 00	CFS 470N 250V 43 04 43 00	CFS 470N 250V 43 04 43 00	CFS 360N 250V 43 44 15 00	CFS 470N 250V 43 04 43 00	CFS 360N 250V 43 44 15 00	CFS 360N 250V 43 44 15 00	CFS 360N 250V 43 44 15 00
RL09 TOCOM	RW 8R2 K 7W 70 43 26 30	RW 8R2 K 7W 70 43 26 30	RW 8R2 K 7W 70 43 26 30	RW 8R2 K 7W 70 43 26 30	RW 8R2 K 7W 70 43 26 30	RW 10R K 5W 20 52 55 60	RW 10R K 5W 20 52 55 60	RW 8R2 K 7W 70 43 26 30	RW 8R2 K 7W 70 43 26 30	RW 8R2 K 7W 70 43 26 30	RW 8R2 K 7W 70 43 26 30	RW 8R2 K 7W 70 43 26 30	RW 8R2 K 7W 70 43 26 30	RW 8R2 K 7W 70 43 26 30	RW 8R2 K 7W 70 43 26 30	RW 8R2 K 7W 70 43 26 30	RW 8R2 K 7W 70 43 26 30
RL22 TOCOM	RMF 91K 0.7W 1% 20 67 31 00	RMF 82K5 0.7W 1% 10 22 49 20	RMF 82K5 0.7W 1% 10 22 49 20	RMF 75K 0.7W 1% 10224620	RMF 75K 0.7W 1% 10 22 46 20	RMF 75K 0.7W 1% 10 22 46 20	RMF 75K 0.7W 1% 10 22 46 20	RMF 75K 0.7W 1% 10 22 46 20	RMF 75K 0.7W 1% 10 22 46 20	RMF 82K 0.7W 1% 10 14 83 10	RMF 82K 0.7W 1% 10 14 83 10	RMF 82K5 0.7W 1% 10 22 49 20	RMF 82K 0.7W 1% 10 14 83 10	RMF 82K5 0.7W 1% 10 22 49 20	RMF 82K 0.7W 1% 10 14 83 10	RMF 82K 0.7W 1% 10 14 83 10	RMF 82K 0.7W 1% 10 14 83 10
RL12 TOCOM	RCFF 0.56R 0.5W J 20 32 23 30	RCFF 0.56R 0.5W J 20 32 23 30	RCFF 0.56R 0.5W J 20 32 23 30	RCFF 0.22R 0.5W J 13 05 51 00	RCFF 0.22R 0.5W J 13 05 51 00	RCFF 1R5 0.5W J 13 00 03 00	RCFF 1R5 0.5W J 13 00 03 00	RCFF 0.56R 0.5W J 20 32 23 30	RCFF 0.56R 0.5W J 20 32 23 30	RCFF 0.68R 0.5W J 10 16 00 20	RCFF 1R 0.5W J 15 00 97 40	RCFF 0.56R 0.5W J 20 32 23 30	RCFF 0.22R 0.5W J 13 05 51 00	RCFF 0.47R 0.5W J 10 16 01 40	RCFF 0.82R 0.5W K 20 67 85 80	RCFF 0.82R 0.5W K 20 67 85 80	RCFF 0.82R 0.5W K 20 67 85 80
RL13 TOCOM	RCFF 0.56R 0.5W J 20 32 23 30	RCFF 0.56R 0.5W J 20 32 23 30	RCFF 0.56R 0.5W J 20 32 23 30	RCFF 1R 0.5W J 15 05 02 70	RCFF 0.22R 0.5W J 13 05 51 00	RCFF 0.56R 0.5W J 20 32 23 30	RCFF 0.56R 0.5W J 20 32 23 30	RCFF 0.22R 0.5W J 13 05 51 00	RCFF 0.22R 0.5W J 13 05 51 00	RCFF 0.22R 0.5W J 13 05 51 00	RCFF 0.22R 0.5W J 13 05 51 00	RCFF 0.22R 0.5W J 13 05 51 00	RCFF 0.22R 0.5W J 13 05 51 00	RCFF 0.22R 0.5W J 13 05 51 00	RCFF 0.22R 0.5W J 13 05 51 00	RCFF 0.22R 0.5W J 13 05 51 00	RCFF 0.22R 0.5W J 13 05 51 00
RL14/JL12 TOCOM	RCFF 1R5 0.5W J 15 05 03 10	RCFF 1R5 0.5W J 15 05 03 10	STRAP 5MM 67 05 68 01	RCFF 0.22R 0.5W J 13 05 51 00	RCFF 0.22R 0.5W J 13 05 51 00	RCFF 0.22R 0.5W J 13 05 51 00	RCFF 0.22R 0.5W J 13 05 51 00	RCFF 0.22R 0.5W J 13 05 51 00	RCFF 0.22R 0.5W J 13 05 51 00	RCFF 2R7 0.5W J 15 05 03 70	RCFF 2R7 0.5W J 15 05 03 70	RCFF 0.22R 0.5W J 13 05 51 00	RCFF 0.22R 0.5W J 13 05 51 00	RCFF 0.22R 0.5W J 13 05 51 00	RCFF 0.22R 0.5W J 13 05 51 00	RCFF 0.22R 0.5W J 13 05 51 00	
RF09 TOCOM	RMF 100K 0.25W 1% 50 88 38 10	RMF 100K 0.25W 1% 50 88 38 10	RMF 100K 0.25W 1% 50 88 38 10	RMF 100K 0.25W 1% 50 88 38 10	RMF 100K 0.25W 1% 50 88 38 10	RMF 121K 0.25W 1% 30 94 05 20	RMF 121K 0.25W 1% 30 94 05 20	RMF 121K 0.25W 1% 30 94 05 20	RMF 121K 0.25W 1% 30 94 05 20	RMF 121K 0.25W 1% 30 94 05 20	RMF 121K 0.25W 1% 30 94 05 20	RMF 140K 0.25W 1% 80 43 78 30	RMF 140K 0.25W 1% 80 43 78 30	RMF 110K 0.25W 1% 11 06 12 10	RMF 140K 0.25W 1% 80 43 78 30	RMF 110K 0.25W 1% 11 06 12 10	RMF 121K 0.25W 1% 30 94 05 20
CRT(INTEGRATED PCB) MAIN PCB(A900)	7 TR CRT VERSION 20 57 86 70	7 TR CRT VERSION 20 57 86 70	7 TR CRT VERSION 20 57 86 70	7 TR CRT VERSION 20 57 86 70	IC CRT VERSION 25 22 60 70	IC CRT VERSION 25 22 60 70	IC CRT VERSION 25 22 60 70	-	IC CRT VERSION 25 22 60 70	-	-	IC CRT VERSION 25 22 60 70	IC CRT VERSION 25 22 60 70	IC CRT VERSION 25 22 60 70	-	-	-
CRT MODULE	-	-	-	-	-	-	-	TV COMB CRT-10 TR 20 63 99 90	-	TV COMB CRT-10 TR 20 63 99 90	TV COMB CRT-10 TR 20 63 99 90	-	-	-	TV COMB CRT 10 TR 20 63 99 90	TV COMB CRT 10 TR 20 63 99 90	TV COMB CRT 10 TR 20 63 99 90
UB @MIN I BEAM	107V	108V	108V	104V	104V	112V	112V	115V	115V	116V	116V	116V	116V	116V	116V	116V	116V

*@ OPTION

DF21	10"-14" TO USE ZPD15V, 17"-21" TO USE ZPD20V
RI17/LI04	FOR STEREO BOARD
LV07	FOR CINCH BOARD ONLY
RF23	FOR 10" MODEL WITH DC/DC ONLY.
BR09 BR05 BR03	INSERT FOR CLK/RADIO OPTION
BA04/JA05	WITH BA04 DELETED JA05
JR59 JA25 TA05 DA05 CA14 CA08	DELETED WITH CLK/RADIO OPTION
BR01	OPTION FOR DOUBLE SCART
BR08	OPTION FOR PSN LED INDICATOR.
RR69	INSERT 1K FOR CLK/RADIO OPTION.
RR72	INSERTED 1K FOR CLK/RADIO OPTION.
LED-RED	ADD JK21
LED-BI COLOUR	ADD DK07, DK08, JK01, JK20, RK17, RK18, RK15, RK16 DELETED JK21.
LR02 LR05 RR44 RR45 CR19 CR20 CR21 CR22	FOR DETACHED KEYBOARD ONLY.
RA37	1K5 (FOR MONO WITH HEADPHONE ONLY)
	1K (FOR MONO WITHOUT HEADPHONE ONLY)
RP37	14", 17"TO USE 18K, 20", 21" TO USE 15K
DL09 JV90 CC21 JR07 CF01 CH17 RR01 RR14 CK04 BR06 BR07 RR08 RR09 CR01 CT56 CT66 CT76 CV08 DA01 JA02 NF02 RA20 RC23 RT56 CP72 CR13 RK19 CA22 DR06 RF34 RF31 TF31 RF32 RF33 RF35 TK01 CI06 RV45 RP53 RP50 DP51 DP50 CP50 RP51 RP54 BP50 JV08 CH17	TO BE DEFINE.
JK22	FOR DETACHED KEYBOARD ONLY (TTA)
CR72 CR71 RR71	FOR DOUBLE SCART ONLY
WITH BURST MODE	ADDED DP45 RP45 CP45 RP46 RP30 RP47 DP46 TP45 DP48.
WITH SMART PLUG	ADD BR10 RR97 RR98 CR92 CR93 RR96 RR95 RR93 RR94 RR99 DELETE D RR29.
WITHOUT SMART PLUG	ADD RR29 DELETED RR94 RR99 BR10 RR97 RR98 CR92 CR93 RR96 RR9 5 RR93.
IR01	FM 20 FOR MONO
	FS 20 FOR STEREO

DIFFERENCES BETWEEN BGHILL' , BGDKK', BG,L AND PAL I TX91G - Stereo

	NORM	PS BGHILL' (NTSC VIDEO)		*'PS BGDKK' (NTSC VIDEO)		PS BG,L (N- VID)		PAL I (N-VID)
POS	TOCOM	DESCRIPTION	TOCOM	DESCRIPTION	TOCOM	DESCRIPTION	TOCOM	DESCRIPTION
CH01	13040160	CE 47U0F +20% 16.0V 85C	13082060	CE 10U0F +20% 50.0V 85C	13040160	CE 47U0F +20% 16.0V 85C	13082060	CE 10U0F +20% 50.0V 85C
CI10	15005190	CCCMIN 1N0F +-10% 50.0V	-	Deleted	15005190	CCCMIN 1N0F +10% -10% 50.0V	-	Deleted
CI11	15002130	CE 10U0F +20% 16.0V 85C	-	Deleted	15002130	CE 10U0F +20% 16.0V 85C	-	Deleted
CI12	13074930	CE 22U0F +20% 50.0V 85C	-	Deleted	13074930	CE 22U0F +20% 50.0V 85C	-	Deleted
CI13	15005390	CCCMIN 22N0F +80% -20% 25.0V	-	Deleted	15005390	CCCMIN 22N0F +80% -20% 25.0V	-	Deleted
CI35	-	Deleted	11054120	CCCFMAX 100N0F +-20% 50.0V	11054120	CCCFMAX 100N0F +-20% 50.0V	11054120	CCCFMAX 100N0F +-20% 50.0V
CI52	11053520	CCCFMAX 39P0F +-5% 50.0V NP0	-	Deleted	-	Deleted	-	Deleted
CI53	11053520	CCCFMAX 39P0F +-5% 50.0V NP0	-	Deleted	-	Deleted	-	Deleted
CI60	15005770	CCCMIN 4N7F +-20% 16.0V Y5R	-	Deleted	-	Deleted	-	Deleted
CI65	15005760	CCCMIN 47P0F +-5% 50.0V SL	-	Deleted	10113550	RCFMN 0 OHM +0% 100MI0W	-	Deleted
CI66	40432440	CCCFMAX 22P0F +-5% 50.0V NP0	-	Deleted	40432440		-	Deleted
CI67	15005530	CCCMIN 2P7F +-10% 50.0V NP0	-	Deleted	15005530		-	Deleted
CI68	15005530	CCCMIN 2P7F +-10% 50.0V NP0	-	Deleted	15005530		-	Deleted
DI50	16007510	D-TLP E7296(BA282) 35.0V	-	Deleted	-	Deleted	-	Deleted
DI51	16007510	D-TLP E7296(BA282) 35.0V	-	Deleted	67056701	STRAP 12.5 MM.	-	Deleted
DI52	16007510	D-TLP E7296(BA282) 35.0V	-	Deleted	-	Deleted	-	Deleted
DI60	16007510	D-TLP E7296(BA282) 35.0V	-	Deleted	-	Deleted	-	Deleted
DI62	70436540	D-SLP 1N4148 100.0V 150E-3A	-	Deleted	70436540	D-SLP 1N4148 100.0V 150E-3A	-	Deleted
II02	20165170	IC-LIN STV8225 1406 A0 00	-	Deleted	20165170	IC-LIN STV8225 1406 A0 00	-	Deleted
JI01	10113550	RCFMN 0 OHM +0% 100MI0W	-	Deleted	-	Deleted	-	Deleted
JI02	10113550	RCFMN 0 OHM +0% 100MI0W	-	Deleted	-	Deleted	-	Deleted
JI03	67056701	STRAP 12.5 MM.	-	Deleted	-	Deleted	-	Deleted
JI04	10113550	RCFMN 0 OHM +0% 100MI0W	-	Deleted	10113550	RCFMN 0 OHM +0% 100MI0W	-	Deleted
JI06	-	Deleted	-	Deleted	10113550	RCFMN 0 OHM +0% 100MI0W	-	Deleted
JI07	67056701	STRAP 12.5 MM.	-	Deleted	67056701	STRAP 12.5 MM.	-	Deleted
JI22	67056701	STRAP 12.5 MM.	-	Deleted	67056701	STRAP 12.5 MM.	-	Deleted
LI61	20510040	LA 7X7 32M4 HZ 100	-	Deleted	20510040	LA 7X7 32M4 HZ 100	-	Deleted
LI63	15040120	LF 3U9H +10% 1.6 OHM 200MI0A	15040180	LF 4U7H +10% 1.7 OHM	15040180	LF 4U7H +10% 1.7 OHM	13020600	LF 5U6H +10%
QI01	10085120	FILSW OFWG3965M 2104 A1	20232070	FILSW G3962M 2104 A2	20232070	FILSW G3962M	10085120	FILSW OFWG3965M 2104 A1
QI02	20489330	FILSW 33M9HZ LITHIUM	-	Deleted	20497040	FILSW L9362M	-	Deleted
QI31	20338160	FILCTRP 6M0 HZ 35DB 70K0HZ	20356510	FILCTRP 6M5 HZ	-	Deleted	20338160	FILCTRP 6M0 HZ 35DB 70K0HZ
QI34	20338170	FILCTRP 5M74 HZ 35DB 70K0HZ	20338170	FILCTRP 5M74 HZ 35DB 70K0HZ	20338170	FILCTRP 5M74 HZ 35DB 70K0HZ	-	Deleted
RH18	15033320	RCFMN 82K0 OHM +5% 100MI0W	-	Deleted	15033320	RCFMN 82K0 OHM +5% 100MI0W	-	Deleted
RI04	15032220	RCFMN 180R0 OHM +5% 100MI0W	15033190	RCFMN 68R0 OHM +5% 100MI0W	15032220	RCFMN 180R0 OHM +5% 100MI0W	15033190	RCFMN 68R0 OHM +5% 100MI0W
RI11	15032570	RCFMN 2K2R0 OHM +5% 100MI0W	-	Deleted	15031990	RCFMN 10K0 OHM +5% 100MI0W	-	Deleted
RI22	-	Deleted	15033090	RCFMN 5K6 OHM +5% 100MI0W	-	Deleted	15033090	RCFMN 5K6 OHM +5% 100MI0W
RI27	15033330	RCFMN 82R0 OHM +5% 100MI0W	15033330	RCFMN 82R0 OHM +5% 100MI0W	15031980	RCFMN 100R0 OHM +5% 100MI0W	15033330	RCFMN 82R0 OHM +5% 100MI0W
RI50	15033210	RCFMN 6K8 OHM +5% 100MI0W	-	Deleted	-	Deleted	-	Deleted
RI51	15006130	RCF 10K0 OHM +5% 250MI0W	-	Deleted	-	Deleted	-	Deleted
RI52	15031990	RCFMN 10K0 OHM +5% 100MI0W	-	Deleted	-	Deleted	-	Deleted
RI53	15032970	RCFMN 4K7 OHM +5% 100MI0W	-	Deleted	-	Deleted	-	Deleted
RI54	15032830	RCFMN 3K9 OHM +5% 100MI0W	-	Deleted	-	Deleted	-	Deleted
RI55	15032590	RCFMN 2K7 OHM +5% 100MI0W	-	Deleted	-	Deleted	-	Deleted
RI56	15032310	RCFMN 1K8 OHM +5% 100MI0W	-	Deleted	-	Deleted	-	Deleted
RI57	15031990	RCFMN 10K0 OHM +5% 100MI0W	-	Deleted	-	Deleted	-	Deleted
RI60	15032590	RCFMN 2K7 OHM +5% 100MI0W	-	Deleted	-	Deleted	-	Deleted
RI63	15032130	RCFMN 150K0 OHM +5% 100MI0W	-	Deleted	15032130	RCFMN 150K0 OHM +5% 100MI0W	-	Deleted
RI74	15033060	RCFMN 56K0 OHM +5% 100MI0W	10113550	RCFMN 0 OHM +0% 100MI0W	15033060	RCFMN 56K0 OHM +5% 100MI0W	10113550	RCFMN 0 OHM +0% 100MI0W
TI03	16007030	TR-SSD DTC144EK N	-	Deleted	-	Deleted	-	Deleted
TI04	16007030	TR-SSD DTC144EK N	-	Deleted	-	Deleted	-	Deleted
TI28	11070770	TR-SLPLF BC847B N 100E-3A 45V	-	Deleted	-	Deleted	-	Deleted
-	-	MAINS CORD (FTZ)		* MAINS CORD (NON-FTZ)		MAINS CORD (FTZ)		MAINS CORD (NON-FTZ)

* Note: FTZ power cord required for Quadra cabinet only.

THE DIFFERENCES BETWEEN MAIN PB ATTACHED KEYBOARD AND DETACHED KEYBOARD ARE AS FOLLOWS:

MAIN PCB WITH ATTACHED KEYBOARD			ASY MAIN PB DETACHED KEYBOARD	
POS.	TOCOM	STRUCTURED NAME	TOCOM	STRUCTURED NAME
A900	25 22 60 70	PCB TX91G MAIN-IC VERSION	25 22 60 70	PCB TX91G MAIN-IC VERSION
BP01	10 45 16 70	PIN-SOLDER 1.3MM 8MM 3075 A0	-	DELETED
BP01	10 23 81 10	RAW CONNECTOR HOUSING	-	DELETED
BP03	-	DELETED	10 45 16 70	PIN-SOLDER 1.3MM 8MM 3075 A0
BP03	-	DELETED	10 23 81 10	RAW CONNECTOR HOUSING
BR02	-	DELETED	80 44 80 90	CONN 2.5MM 12MA ST NAT 00
CK03	13 07 04 70	CE 4U7 +20% 16V 85C	-	DELETED
CR19	-	DELETED	15 00 53 80	CCCMIN 220P K 50V
CR20	-	DELETED	15 00 53 80	CCCMIN 220P K 50V
CR21	-	DELETED	15 00 53 80	CCCMIN 220P K 50V
CR22	-	DELETED	15 00 53 80	CCCMIN 220P K 50V
DK01	16 01 04 30	D-LEM MV5491A RED/GN	-	DELETED
DK01	40 48 05 50	HOLDER LED (MD/SD/PD)	-	DELETED
DK07	50 89 06 50	D-ZENER BZX55C6V8 6.8V 500MI0W	-	DELETED
DK08	70 43 65 40	D-SLP 1N4148 100V 150E-3A	-	DELETED
IK01	10 13 24 10	IC-SP TFMK1330T PHOTO-MODULE 2737 A0	-	DELETED
JK01	67 05 67 01	STRAP 0.6MM 4.5MM 12.5MM 1035 A0	-	DELETED
JK04	67 05 67 01	STRAP 0.6MM 4.5MM 12.5MM 1035 A0	-	DELETED
JK07	67 05 70 01	STRAP 0.6MM 4.5MM 15MM 1035 A0	-	DELETED
JK09	67 05 70 01	STRAP 0.6MM 4.5MM 15MM 1035 A0	-	DELETED
JK11	67 05 70 01	STRAP 0.6MM 4.5MM 15MM 1035 A0	-	DELETED
JK12	67 05 70 01	STRAP 0.6MM 4.5MM 15MM 1035 A0	-	DELETED
JK13	67 05 70 01	STRAP 0.6MM 4.5MM 15MM 1035 A0	-	DELETED
JK22	-	DELETED	67 05 67 01	STRAP 0.6MM 4.5MM 12.5MM 1035 A0
RK11	15 00 72 60	RCF 220R +5% 250MI0W	-	DELETED
RR44	-	DELETED	15 03 29 30	RCFMN 470R +5% 100MI0W +500PPM
RR45	-	DELETED	15 03 29 30	RCFMN 470R +5% 100MI0W +500PPM
LR02	67 05 67 01	STRAP 0.6MM 4.5MM 12.5MM	15 04 03 30	LF 6U8H +10%
LR05	67 05 67 01	STRAP 0.6MM 4.5MM 12.5MM	15 04 03 40	LF 6U8H +10%
SK01	10 45 33 70	DUAL TACT SWITCH	-	DELETED
SK02	-	DELETED	-	DELETED
SK03	10 45 33 70	DUAL TACT SWITCH	-	DELETED
SK04	-	DELETED	-	DELETED
SP05	20 61 23 90	SWITCH-MAIN PUSH 250V 4A 2T 2P MSB4001 3004 A1	-	DELETED

DIFFERENCE BETWEEN SINGLE & DOUBLE SCART (STEREO)

POS.	S/SCART	D/SCART
BE01	SCART	21 WAY
BR01	DEL	3 WAY
RI30	27R	0R
RI31	75R	DEL
RV04	100R	12.5MM
RV05	75R	DEL
RV06	100R	12.5MM
RV07	75R	DEL
RV08	100R	12.5MM
RV09	75R	DEL
RV10	100R	12.5MM
RV11	75R	DEL
NF01	ASY TDA1771	ASY TDA1771 D/SCART
5040	DEL	ASY D/SCART
6000	DEL	3 WAY WIRE
6010	DEL	3 WAY WIRE
JR52	-	3.3uH
CI01	1N	390P
CI02	1N	390P
CI18	0R	150P
RI12	150P	-
RI13	150P	-
*CC01	0R	10N
*RC25	10N	33R

* FOR 15" TOWER MODEL ONLY

WARNING : *Before servicing this chassis read the safety recommendations.*
ATTENTION : *Avant toute intervention sur ce châssis, lire les recommandations de sécurité.*
ACHTUNG : *Vor jedem Eingriff auf diesem Chassis, die Sicherheitsvorschriften lesen.*
ATTENZIONE : *Prima di intervenire sullo chassis, leggere le norme di sicurezza.*
IMPORTANTE : *Antes de cualquier intervención, leer las recomendaciones de seguridad.*

Do not disconnect modules when they are enregized! Repairs on power supply section are to be carried out only with isolating transformer.
Ne pas retirer les modules lorsqu'ils sont sous tension. N'effectuer les travaux de maintenance sur la partie reliée au secteur (Switch Mode) qu'au travers d'un transformateur d'isolement.
Module nicht bei eingeschaltetem Gerät entfernen ! Servicearbeiten am Netzteil nur unter Verwendung eines Regeltrenntrafos durchführen.
Non scollegare i moduli quando sono alimentati! Intraprendere riparazioni sulla sezione alimentatore solo con trasformatore isolante.
No desconectar los módulos cuando están activados. Las reparaciones en la sección de alimentación de energía deben ser ejecutadas solamente con un transformador de separación.

⚠ Indicates critical safety components, and identical components should be used for replacement. Only then can the operational safety be garanteed.
Le remplacement des éléments de sécurité (repérés avec le symbole ⚠) par des composants non homologués selon la Norme CEI 65 entraine la non-conformité de l'appareil. Dans ce cas, la responsabilité du fabricant n'est plus engagée.
Wenn Sicherheitsteile (mit dem Symbol ⚠ gekennzeichnet) nicht durch Original - Ersatzteile ersetzt werden, erlischt die Haftung des Herstellers.
La sostituzione degli elementi di sicurezza (marcati con il segno ⚠) con componenti non omologati secondo la norma CEI 65 comporta la non conformitá dell'apparecchio. In tal caso è "esclusa la responsabilità " del costruttore.
La sustitución de elementos de seguridad (marcados con el simbolo ⚠) por componentes no homologados segun la norma CEI 65, provoca la no conformidad del aparato. En ese caso, el fabricante cesa de ser responsable.

Note : During measurements in the power supply unit, use the primary power unit ground (Emit. TP060).
Attention : Mesures dans le bloc alimentation. Utiliser la masse du bloc alimentation (Emet. TP060).
Achtung : Bei Messungen im Primärnetzteil. Primärnetzteilmasse verwenden (Emit. TP060).
Attentionze : Misure nell'alimentatore primario. Usare massa alimentazione primario (Emet. TP060).
Cuidado : Medida en el bloque de alimentación. Utilizar la masa del bloque de alimentación (Emet. TP060).

LOCATION OF CONTROLS - EMPLACEMENT DES REGLAGES - SERVICE LAGEPLAN - POSIZIONE REGULATORI DI SERVIZIO - SITUACIÓN DE LOS AJUSTES

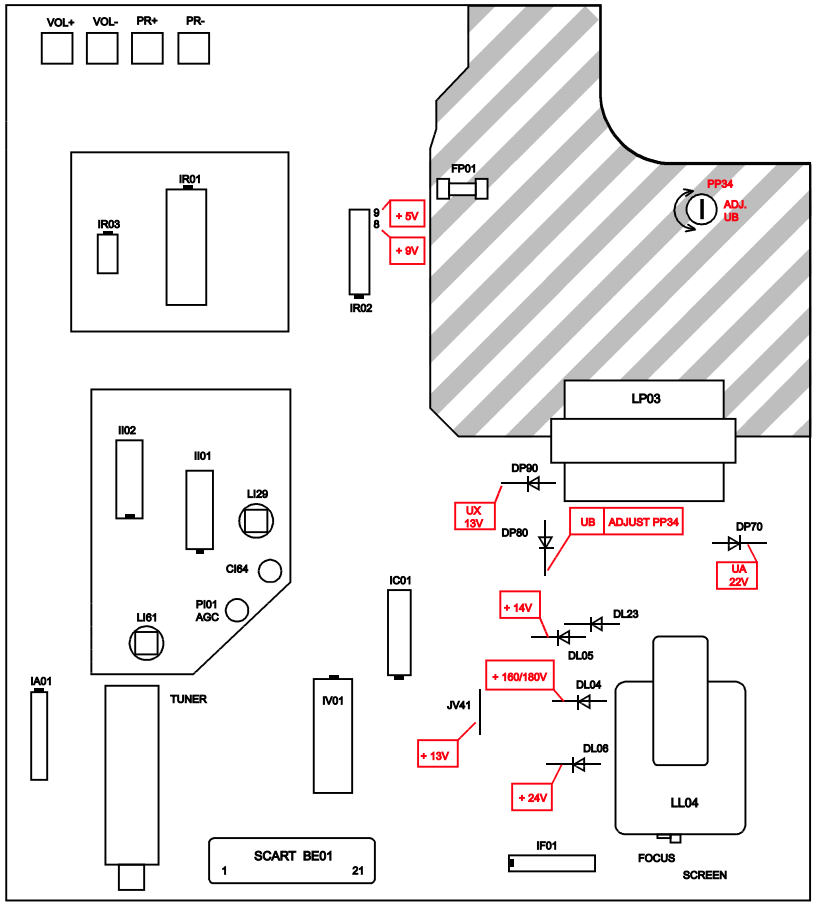

ADJUSTMENTS - REGLAGES - EINSTELLUNGEN - REGOLAZIONE - AJUSTES

U B — PP 34 — Contrast, brightness and volume to minimum — V= — DP 80 — YP07

Screen Size	CRT Vendor / Type N°	FBT Vendor / Type N°	Min beam current UB adjustment
10"	Samsung 27GDC85X-TC10	Samsung FCV1010-E03	106V+/-0,5V
14"	Thal-CRT (baretube) A34JXV70X	Samsung FCV1410-E18	107V+/-0,5V
	ChungHwa 370KRB22-TC38	Samsung FCV1410-E18	108V+/-0,5V
		Orega 203832HO 204529H0 P1 *G5603-03	108V+/-0,5V
	Polkolor A34EFU13X91	Samsung FCV1410-E18	104V+/-0,5V
		Orega 203832HO 204529Ho P1 *G5603-03	104V+/-0,5V
17"	Philips A41EAM40X01	Samsung FCV1410-E18	110V+/-0,5V
		Orega 203832HO 204529H0 P1 *G5603-00	110V+/-0,5V

Screen Size	CRT Vendor / Type N°	FBT Vendor / Type N°	Min beam current UB adjustment
20"	Polkolor A48EEV13X01	Samsung FCV2010-E07	115V+/-0,5V
		Orega 203832IO 204529G0 P1 *G5604-00	115V+/-0,5V
	ChungHwa 510UFB22-TC55	Samsung FCV2010-E07	116V+/-0,5V
		Orega 203832IO 204529G0 P1 *G5604-00	116V+/-0,5V
21"	Hitachi A51JSY61X03	Samsung FCV2010-E07	116V+/-0,5V
		Orega 203832IO 204529G0 P1 *G5604-00	116V+/-0,5V
21"	VideoColor A51EBV13X01	Orega 203832IO 204529G0 P1 *G5604-00	116V+/-0,5V
	VideoColor A51EFS43X191	Orega *G5552-00 *G5624-00 *G5605-00	

U G2 / cutoff	SCREEN	Use a peak white pattern. Mode preference: Image Ambiance AV (no Signal, black screen)	highest output CRT V Collector: TT52,TT62,TT72 (Transistor Version) Pin 9, 12, 15 IT01 (IC Version)	Adjust Screen voltage VG2 120V +/- 5V: 20", 14", 15", 17" 145V +/- 5V : 20" & 21" + = 50% B G RED Cutoff level GND
FOCUS	FOCUS	Contrast = 100% Brightness = 0% Test pattern (standard values)		Sharp picture

ADJUSTMENTS - REGLAGES - EINSTELLUNGEN
REGOLAZIONE - AJUSTES

U G2 / cutoff	SCREEN	Use a peak white pattern. Mode preferred: Image Assistance AV (no Signal, black screen)	Highest output CRT V Collector: TT82,TT92,TT72 (Transistor Version) Pin 9, 12, 15 (TT81 (IC Version)	Adjust Screen voltage VG2 120V +/- 5V: 20", 14", 19", 17" 140V +/- 5V / 25" & 29" + = 80% B G RED Cutoff level GND
FOCUS	FOCUS	Contrast = 100% Brightness = 0% Test pattern (standard values)		Sharp picture

SERVICE-MODE (GB)

It is necessary to enter the Service Mode in order to carry out alignment of the TV set. Most adjustments can be made with the RCU, except the Uoptem, Focus and Screen voltages.

1. Service Mode Access

1.1 With the RCU, switch the TV set into the "Standby" mode.
1.2 Switch "Off" the TV set by mains supply switch (wait until LED is dark).
1.3 Whilst depressing the RCU "Blue (V1)" button, switch "On" the TV set using the mains supply switch.
1.4 Release and press once again the RCU "Blue (V1) " button, the following "Set-Up" menu should be displayed."

SET-UP	VIDEO	GEOM
TX91 FM20 ----------		TM

Important : The Service Mode cannot be entered if any equipment is connected to the Scart socket, i.e. pin 8 switching voltage present.

2. Function or Page Selection (GEOM)

2.1 With the RCU Volume "+" and "-" buttons, highlight the menu containing the function to be aligned.
2.2 Press the RCU "Blue (V1)" ◊ or the middle value one ◊ , select a setting or a page (1, 2, 3,...).

3. Switching between Service and TV modes

3.1 Whilst in the Service Mode, normal TV controls are disabled, to enable these controls whilst in the Service Mode (i.e. for channel changing etc.) press the"TV" button on the RCU. To return to the Service Mode, press the "Blue (V1)" button on the RCU.

4. Alignment and storing new function value

4.1 The current value of the selected function is displayed in a hexadecimal form to the right of the function name. This value is adjusted by means of the RCU Volume "+" and "-" buttons.
4.2 To STORE the function new value, highlight MEMO and press the RCU Volume "+" button.
4.3 The R-STORE(RE) fns allows you to call values stored in NVM with the "-" key.
4.4 Selection the ROM function downloads the production software default values, these are not very accurate and should only be used in very special cases.
Whilst in the «Service-Mode», a long press (more than 3s) of the RCU «O» button, will reset the TV to the «factory default conditions».

5. Leaving the Service Mode

5.1 To leave the Service mode either, switch the TV set into "Standby" or switch "Off" the mains supply.

MODE SERVICE (F)

Le mode service sert au réglage de l'appareil. Toutes les opérations de réglage s'effectuent à l'aide de la télécommande (sauf la tension de système, les réglages de Focus et de tension de grille-écran).

1. Accès au mode service

1.1 Commuter le téléseur en position de veille avec la télécommande
1.2 Eteindre le téléseur par l'interrupteur secteur (attendre l'extinction complète du voyant).
1.3 Maintenant la touche bleue enfoncée et mettre simultanément le téléseur en marche avec l'interrupteur secteur.
1.4 Le menu suivant apparaît après avoir appyyé à nouveau sur la touche bleue. (V1).

SET-UP	VIDEO	GEOM
TX91 FM20 ----------		TM

Attention : Le mode service n'est pas accessible si un appareil est connecté à la prise péritélévision.

2. Sélection de la fonction ou de la page (GEOM)

Par les touches +/- de la télécommande vous pouvez choisir le menu correspondant: SET- UP,VIDEO ou GEOM et avec la touche bleue (V1) ◊ ou la touche valeur moyenne ◊ , sélectionner un réglage ou une page (1, 2, 3,...).

3. Inversion entre modes service et TV

Les fonctions télévision normales ne sont pas utilisables en mode service. Si elles sont nécessaires en mode service (p. ex. changement de programme), la touche (TV) permet de commuter en mode TV. Vous pouvez revenir au mode service en appyyant sur la touche bleue.

4. Réglage des fonctions sélectionnées; mémorisation

La valeur momentanée de la fonction sélectionnée est indiquée sous forme hexadécimale à droite, à coté de la position à régler et peut être modifiée avec la télécommande par la touche + ou -.
Le ligne MEMO permet de mémoriser les nouvelles valeurs de réglage avec la touche +.
Le ligne R-STO(RE) permet de rappeler les valeurs mémorisées en NVM avec la touche "-" .
Les valeurs par défaut du logiciel peuvent être changées en sélectionnant la fonction ROM . Elles ne correspond cependant qu'une approximation du réglage et ne doivent être utilisées qu'en cas de nécessité.
En mode service une longue pression (plus de 3s) sur la touche «Reset» le TV aux valeurs par défaut des réglages usine.

5. Sortie du mode service

Pour sortir du mode service, commuter le téléviseur en position de veille ou le mettre hors service par l'interrupteur secteur.

SERVICE-MODE (D)

Der Service-Mode wird für den Geräteabgleich benötigt. Alle Einstellungen erfolgen mit der Fernbedienung (bis auf Systemspannung, Fokusspannung und Bildmitgliederspannung).

1.Service-Mode einschalten

1.1 Mit der Fernbedienung das Fernsehgerät in Stand-by schalten.
1.2 Das Gerät mit dem Netzschalter ausschalten (warten bis LED dunkel ist)
1.3 Die blaue Taste der Fernbedienung gedrückt halten und gleichzeitig das Gerät mit dem Netzschalter einschalten.
1.4 Das folgende Menü erscheint nach erneutem Drücken der blauen Taste

SET-UP	VIDEO	GEOM
TX91 FM20 ----------		TM

Achtung : Der Service-Mode läßt sich nicht einschalten, wenn an einer Euro-AV-Buchse ein Gerät aktiviert ist, d.h. die Schaltspannung anliegt.

2. Funktionswahl oder Seitenwahl (GEOM)

Mit den Tasten +/- der Fernbedienung können Sie das folgende Menü auswählen: SET-UP,VIDEO oder GEOM, und mit der blauen Taste(V1) ◊ oder der Taste Mittelwert ◊ können Sie eine Einstellung oder eine Seite (1,2,3,....) auswählen.

3. Umschalten zwischen Service- und TV-Betrieb

Im Service-Mode sind die normalen Fernsehfunktionen nicht bedienbar. Werden diese im Service-Mode benötigt (z.B. Programmwechsel), kann mit der Taste (TV) in den normalen TV-Betrieb geschaltet werden. Durch Drücken der blauen Taste gelangt man zurück zum Service Mode.

4. Abgleich der gewählten Funktion und Speichern

Der momentane Wert der gewählten Funktion wird hexadezimal rechts neben der abzugleichenden Position angegeben und kann mit der Taste + bzw. - auf der Fernbedienung verändert werden.
Die Änderungen des jeweiligen Menüs können unter MEMO mit der +. Taste gespeichert werden. In der Zeile R-STO(RE) können die in NVM gespeicherten Werte mit der Taste "-" aufgerufen werden.
Im Werkzustand ROM lesen man die Software-Defaultwerte laden.Sie sind aber nur eine grobe Anäherung an den noch vorzunehmenden Abgleich und sollten nur im Notfall verwendet werden.
Im Service-Mend : Durch längeren Druck (mehr als 3 Sek.) wird das Gerät auf die "Factory default werte" zurückgesetzt.

5. Service-Mode verlassen

Zum Verlassen des Service-Mode das Gerät in Stand By schalten oder mit dem Netzschalter ausschalten.

MODO SERVICIO (E)

Se necesita el MODO SERVICIO para ajustar el aparato. Todos los ajustes se hacen con el mando a distancia (a excepción de la tensión del sistema, los ajustes del foco y las tensiones de la rejilla de pantalla).

1. Ajustar el MODO SERVICIO

1.1 Con el mando a distancia conectar a STANDBY el televisor.
1.2 Desconectar el aparato con el interruptor de la red (esperar hasta que el LED se apague).
1.3 Mantener pulsada la tecla azul y conectar el aparato simultáneamente con el interruptor de red.
1.4 El menú siguiente aparece volviendo a pulsar la tecla azul.

SET-UP	VIDEO	GEOM
TX91 FM20 ----------		TM

Atención : No se puede conectar el MODO SERVICIO cuando en Euroiema-AV está activado un aparato, es decir, cuando existe tensión de conexión.

2. Selección de las funciones o selección de página (GEOM)

10. Mediante las teclas +/- del telemando usted puede escoger el menú correspondiente: SET-UP, VIDEO o GEOM y con la tecla azul (V1) ◊ o la tecla valor medio ◊ , seleccionar un ajuste o una página (1, 2, 3,...)

SERVICE-MODE (I)

Il Service-Mode è necessario per l'allineamento dell'apparecchio. Tutte le regolazioni si effettuano con il telecomando. (a parte la tensione del sistema, la regolazione del fuoco e le tensioni delle griglie schermo).

1. Attivazione del Service-Mode

1.1 Commutare il televisore in stand-by con il telecomando.
1.2 Spegnere l'apparecchio con l'interruttore di rete (attendere finchè il LED è spento).
1.3 Tenere premuto il pulsante blu e accendere contemporaneamente l'apparecchio con l'interruttore di rete.
1.4 Il seguente menu appare non appena si aziona nuovamente il pulsante blu.

SET-UP	VIDEO	GEOM
TX91 FM20 ----------		TM

Attenzione : Il Service-Mode non si può attivare se è attivato un apparecchio collegato alla presa di perifeèriéeione AV, cioè se è presente la tensione ausiliaria.

2. Scelta della funzione o selezione pagina (GEOM).

Per i tasti +/- del telecomando, potete scegliere il menu corrispondente: SET-UP, VIDEO o GEOM e con il tasto blu (V1) ◊ o il tasto valore medio ◊ , una regolazione o una pagina (1, 2, 3, ecc.)

3. Commutazione fra funzione Service-Mode e TV

Nella modalità Service-Mode non si possono attivare le normali funzioni televisive. Se occorre richiamarle in Service-Mode (ad es. se si vuole cambiare il programma), si può attivare la normale modalità TV con il pulsante (TV). Premendo il pulsante blu si riattiva il Service-Mode.

4. Taratura della funzione scelta e memorizzazione

Il valore momentaneo della funzione scelta viene indicato in formato esadecimale a destra, accanto alla posizione da allineare e può essere cambiato con il pulsante + o - del telecomando.
Le modifiche effettuate nel relativo menu si possono memorizzare in MEMO con il pulsante +. La linea R-STO(RE) permette di richiamare i valori memorizzati in NVM con il tasto -.
Nell'ajustione di menu ROM si possono caricare i valori di default del software. Essi rappresentano però una taratura approssimativa prima di eseguire quella definitiva e si dovrebbero usare solo in caso di emergenza.
Mentre si è nel «Servizio Service», una lunga pressione (più di 3s) del tasto «O» riporterà il TV alle «condizioni di default di fabbrica».

5. Disattivazione del Service-Mode

Per disattivare il ServiceMode, commutare l'apparecchio in stand-by o spegnerlo con l'interruttore di rete.

3. Commutar entre funcionamiento Servicio y TV

En el MODO SERVICIO las funciones de televisión normales no pueden operarse. Si se necesitan éstas en MODO SERVICIO (p.ej., cambio de programa), con la tecla (TV) puede conmutarse a la operación TV normal.
Pulsando la tecla azul se vuelve al MODO SERVICIO.

4. Ajuste de la función elegida y almacenamiento

El valor momentáneo de la función elegida es indicado de modo hexadecimal a la derecha, al lado de la posición a ajustar, y puede cambiarse con la tecla + o bien - en el mando a distancia. Los cambios del menú respectivo pueden almacenarse bajo MEMO con la tecla +.
La línea R-STO (RE) permite recuperar los valores memorizados en NVM con la tecla "-".
En el punto de menu ROM se pueden cargar los valores por defecto del software . Sin embargo, son sólo una aproximación basta al ajuste aún a realizar y deben usarse sólo en caso de emergencia.
En modo servicio, si se mantiene pulsada (más de 3 seg.) la tecla «O» toma por defecto los valores de «ajuste en fábrica».

5. Salir del MODO SERVICIO

Conmute el aparato a STANDBY o En de salir del MODO SERVICIO o desconectar con el interruptor de la red.

TV mono :

SET-UP						
Software code and configuration						
BRAND	1	2	3	NONE		
NORM	B	BD	BLD	BIL	BL	I
SUB-VOL	- 2 / 2			1		
- R-STO	+ MEMO			O ROM		

TV stereo :

SET-UP						
Software code and configuration						
BRAND	1	2	3	NONE		
NORM	B	BD	BLD	BIL	BL	I
DEC PR4	On			Off		
- R-STO	+ MEMO			O ROM		

VIDEO	
page 1	
SUB-BRT	7 / 7 0
VIDEO page 2	
R-DC	00-3F 24
G-DC	00-3F 12
VIDEO page 3	
R-DRV	00-3F 1F
G-DRV	00-3F 1E
VIDEO page 4	
B-DRV	00-3F 1C
PEAK	-/+
VIDEO page 5	
SUB-COL	-7 / 7 2
- RESTORE	- MEMO 8 ROM

GEOM	
H - PHA	00 - 3F 0E
V - AMP	00 - 7F 02
V - LIN	00 - 0F 03
H - PHA	00 - 3F 29
H - AMP	00 - 3F 15
- R-STO	+MEMO 0 ROM

Test Bar pattern used : 4/3 with geometric circle. adjust separate for 4/3 and 16/9 format

SET-UP	
BRANDT	Brand Selection 1 : TELEFUNKEN 2 : BABAFERGUSON/ 3 : THOMSON/ NORDMENDE NONE : NON DEFINI
NORM	Standards B = BG PAL SECAM (Sound FM 5,5MHz) I = I PAL (UKIRELAND) (Sound FM 6MHz) L = L SECAM (France) (Sound AM 6,5MHz) D = D/K2 SECAM (SOUND FM 6,5 MHZ) M = NTSC M (Sound FM 4,5MHz)
DEC PR4 (TX91G stereo)	NICAM From Canal+ decoder On : Enable OFF : Disable The special sound path handling for Canal+ on PRO4
SUB-VOL (TX91G mono)	Volume offset adjustment: = V — = 50% Ve (AV) = 600mV / 1Hz Adjust SUB-VOL Vs (2-p) =0,5VRMS

VIDEO		
SUB-BRT = 50%		black
R - DC*		grey
G - DC*		grey
R -DRV**		white
G - DRV**		white
B - DRV**		white
PEAK** PEAK** = 50% = 100%	CRT Pin 6,8,11 Oscillo. or oscilloscope	AB 10v 12 10 600 14 12 800 16 14 18 16 20 18 400
SUB-COL	75% PAL Colour bar/Test pattern	Color offset adjustment Saturation=100% CRT Pin 11(B) (Oscillo.1)

Notes :
* adjust and stop separate for RF BG, RF L Norm, AV and RGB mode.

** After PEAK white adjustment control brightness and cut off setting. Repeat the adjustments if necessary.

Tableau Software Code

Software Version code	Description	Remarque
TX91 FM - (YY)	TX91G Europe Mono Software (YY)	(YY) = 10, 11,12 ...20, 21
TX91 FS - (YY)	TX91G Europe Stereo Software (YY)	(YY) = 10, 11,12 ...20, 21
TX91 FAM - (YY)	TX91G Asia Mono Software (YY)	(YY) = 10, 11,12 ...20, 21
TX91 FAS - (YY)	TX91G Asia Stereo Software (YY)	(YY) = 10, 11,12 ...20, 21

TV Configuration Code :

T	TEXT MODULE
S	STEREO MODULE
M MONO	SET

Oscillo.1

correct

Incorrect

GEOMETRY MODE ALIGNMENT - RECEIVER : TV WITH 4/3 TUBE

Signal : 4/3 test pattern 50Hz - 60Hz

4 / 3 standard mode		overscan V=107% , H=107% 1- Adjust the horizontal centering 2 - Adjust vertical centering 3 - Adjust picture height to V = 107% - Repeat if necessary with 60 Hz
16 / 9 standard mode		1 - Adjust horizontal centering (reference : screen edge) 2 - Adjust the vertical amplitud until the oval heigh is 75% of the oval width. - Repeat if necessary with 60 Hz

H - PHA	
V - AMP 50Hz	
H - AMP 50Hz	
V - Pos	
OFFSET	V- AMP OFFSET ADJUSTMENT

MEASUREMENT CONDITIONS - CONDITIONS DE MESURES - MESSBEDINGUNGEN CONDIZIONI DI MISURA - CONDICIONES DE MEDIDAS

RECEIVER :
Bar test pattern : PAL, I standard, 100% white.

- On UHF, input level 1 mV
- Via the scart socket, input level 1 Vpp

Colour, contrast and brightness at mid-position, sound at minimum.
Programme selected : PR 01.
DC voltages measured between the point and earth using a digital voltmeter.

RECEPTEUR :
Mire de barres : SECAM, Norm L, Blanc 100%.

- En UHF, niveau d'entrée 1 mV
- Par la prise Péritélévision, niveau d'entrée 1Vcc.

Couleur, contraste, lumière à mi-course, son minimum.
Programme affecté PR 01.
Tensions continues relevées par rapport à la masse avec un voltmètre numérique.

EMPFÄNGER :
Farbbalken : PAL, Norm G, Weiss 100%

- Bei UHF Eingangspegel 1 mV.
- Über die Scartbuchse : Eingangspegel 1 Vss.

Farbe, Kontrast, Helligkeit in der Mitte des Bereichs, Ton auf Minimum.
Zugeordnetes Programm PR 01.
Gleichspannungen mit einem digitalen Voltmeter zur Masse gemessen.

RICEVITORE :
Monoscopio per barre : PAL, norma G. bianco 100%.

- In UHF, livello d'entrata 1 mV,
- Per la presa SCART, livello d'entrata 1 Vcc.

Colore, Contrasto, Luce a metä corsa, Suono minimo.
Programma designato PR 01.
Tensioni continue rilevate rispetto alla massa con un voltametro numerico.

RECEPTOR :
Mira de barras : PAL, norma G, blanco 100%.

- En UHF, nivel de entrada 1 mV,
- Por la toma Peritelevision, nivel de entrada 1 Vpp.

Color, Contraste, luz a mitad de carrera, Sonido minimo.
Programa afectado PR 01.
Tensiones continuas marcadas en relacion a la masa con un voltimetro digital.

THOMSON MULTI MEDIA

TV

Brandt FERGUSON NORDMENDE SABA TELEFUNKEN THOMSON

PARTS LIST
LISTE PIECES DETACHEES
ERSATZTEILLISTE
LISTA PARTI DI RICAMBIO
LISTA DE PIEZAS DE REPUESTO

TELEFUNKEN
MG1470CT
Chassis TX91G

MODULES

MAIN	**TX91G14"MPBPSBGHILL'**	
DVT	**DVTTX91G**	**20525850**
FCB	**KBTX9114"**	**20734490**

FP23,70	MP160	⚠ 10457130
FP90	MP125	⚠ 10469180
IA01	TDA7253	20203120
IC01	TDA4665	20335750
IF01	TDA1771	10044490
II01	STV8224A2	10451330
II02	STV8225	20165170
IK06	TMFT1330T	10132400
IR01	ST9293J9B1/HAI FM20A	20801170
IR02	TDA8139	10044580
IR03	ST24C04/B1	10030300
IV01	STV2118B (CUT 5.1)	10384680
IX01	SAA5281ZP/E	10258810
IX02	MC7805/CT	46025200
TA05,06,**TF**21, **TI**28,32,**TK**02, **TR**01,04,05	BC848B SMD	35030590
TH02	BC338-40	16000590
TI01	MMBTH10L SMD	16006500
TI03,04,30	DTC144EK SMD	16007030
TI31,**TV**01,02	BC858B SMD	16006330
TL01,**TP**22	BC337-40	45001466
TL02	BUH515D	20666700
TL13	2SC2236Y	16000220
TP20	BUL512HI	10440310
TP23	MPS750	16001340
TP34	BC858C SMD	50854683
TR02	BC548B	16000930
TT51,61,71	BF423	16003110
TT52,62,72	2SC2482N	16003760
TT81	BC807-40 SMD	16006220
TX01	BC558B	16001110
TX02	BC548C	16000940

DA05	BZX55B2V7	80444010
DC01,**DK**04, **DP**34,**DR**07	BZX55C5V1	80444140
DF01,**DL**07,08	1N4001	16008160
DF03,04	BZX55C11	11073670
DF21	BZX55C15	20475420
DF22,**DI**62, **DK**01,**DL**01,11, 20,23,**DP**25, **DR**05,**DT**50,60, 70,86,**DV**01,02, 03,**DX**01,02,03, 04	1N4148	44009209
DH01	BZX55C30	80444170
DH02	BZX55C5V6/ZPD5,6	44025401
DI33,34,50,51, 52,60	BA282	16007510
DK02	MV5491A LED	10036730
DK05	BZX55C6V2	20475410
DL02,04,05,06, **DP**19,23,31,32	RGP10G	10459090
DL12	BZX55B4V3	90578000
DL13	BZX55B9V1	70438220
DL21	ZPD6,8	44074501
DP01,02,03,04	BYW27-1000	10455390
DP29,37,38	LL4148 SMD	16012450
DP33	BZX85C27/ZPY27	10246740
DP70,90	RGP15G	10272800
DP80	BYW76	16009120
DR01	BZX55B13	50890560
DR04,**DT**85	ZPD8,2	44021504
DT51,61,71	BAV21	44044407
DV04	BZX55B8V2	40441820

QC01	4M433619HZ	10087710
QC02	3M579545HZ	10087720
QI01	OFWG1967M FOS	10247670
QI02	33M9HZ FOS	20489330
QI31	6M0HZ	48042300
QI32	5M5HZ	20336430
QI33	6M0HZ	48039700
QI34	5M74HZ	20338170
QR01	8M0HZ	10254430
QV01	503K0HZ	48023700
QX01	27M0HZ	20548370

LI29	38M9HZ	20310930
LI61	32M4HZ	20510040

PI01	10K0 OHM	20115670
PP34	470R0 OHM	10260350

RA25	1R0 OHM 5% 2W	20544230
RF05	1R8 OHM 5% 0,50W	20649310
RF09	100K0 OHM 1% 0,25W	⚠ 50883810
RH16	10R0 OHM 5% 0,25W	⚠ 15009580
RH17,**RX**01	27R0 OHM 5% 0,25W	⚠ 15009840
RK04,**RR**20, **RT**68,**RV**04,06, 08,10	100R0 OHM 5% 0,25W	30943330
RL07	1K0 OHM 10% 0,50W	⚠ 10226290
RL08	33R0 OHM 5% 2W	15022830
RL09	8R2 OHM 10% 7W	70432630
RL11	15R0 OHM 5% 0,50W	⚠ 10226280
RL12,13	0R56 OHM 5% 0,50W	⚠ 10313110
RL16,22	82K0 OHM 1% 0,70W	10148310
RL22	54K5 OHM 1% 0,70W	10224940
RP01	5R1 OHM 10% 5W	20369640
RP02	25R0 OHM 220V PTC	⚠ 30093400
RP15	10M0 OHM 5% 0,70W	⚠ 20564520
RP20	1R0 OHM 5% 2,50W	10383240
RP44	1R0 OHM 5% 0,25W	⚠ 15009730
RT52,62,72	10K0 OHM 10% 2W	15022700
RT90	10R0 OHM 5% 0,70W	15006200
RV02	56R0 OHM 5% 0,30W	⚠ 15010060

CL04	6N8F 3,5% 1K6V	10374600

R : RECYCLED PART
: PIECE RECYCLEE
: AUSTAUSCHTEILE
: RICAMBIO RICICLATO
: MODULO REPROCESADO

For any requests, please contact THOMSON multimedia after sales service area
Pour toutes précisions, contactez votre service apres vente local THOMSON multimedia
Für weitere Auskünfte, wenden Sie sich bitte an die THOMSON multimedia Kundendienste
Per precisazioni, contattare l'assistenza tecnica THOMSON multimedia
Para cualquier pregunta, por favor contactar con el responsable de zona del servicio postventa de THOMSON multimedia

10 / 97 **35052760**
REV. N° 0 00 / 00 **00000000**
1/2

No copying, translation, modification on other use authorized. All rights reserved worldwide. • Tous droits de reproduction, de traduction, d'adaptation et d'exécution réservés pour tous les pays. • Sämtliche Urheberrechte an diesen Texten und Zeichnungen Vervielfältigungen - auch auszugsweise - nur mit unserer vorherigen Zustimmung zulässig. Alle Rechte vorbehalten. • I diritti di riproduzione, di traduzione, e esecuzione sono riservati per tutti i paesi. • Derechos de reproduccion, de traduccion, de adap

CL05	390N0F 10% 250V	43171400
CL06	680N0F 20% 160V	13076980
CL08	6N8F 5% 400V	10158380
CL09	1U0F 10% 160V	⚠ 20706480
CL10,15	330P0F 20% 1K0V	14035270
CL17,CP13,91	330P0F 20% 400V	14002220
CL18	270P0F 10% 2K0V	14036000
CP01,02	100N0F 20% 275V	⚠ 10331520
CP03	68N0F 20% 250V	10256210
CP04	10N0F 20% 400V	10094420
CP05,06	4N7F 1K0V	10058740
CP10	100U0F 385V	30662900
CP15	1N0F 20% 400V	⚠ 20822690
CP21	1N0F 10% 1K0V	⚠ 43441400
CP24	10N0F 10% 100V	10279180
CP71	2N2F 10% 400V	10188880
CP71	2N2F 400V	10078890
CP79	470P0F 10% 3K0V	14006050
CT82	2U2F 20% 250V	10190240
CT84	10N0F 20% 400V	14033040
CT85	1N0F 2K0V	14034870

LL01	DRIVER	20609540
LL03		⚠ 30909908
LL05	FCV1410E18	⚠ 20202880
LP02		⚠ 10395160
LP03	SMT17	⚠ 10387120

OTHER PARTS
AUTRES PIECES
SONSTIGE TEILE
ALTRE PARTI
OTRAS PIEZAS

BE01	SCART SOCKET PRISE PERITEL EURO-AV-BUCHSE EUROPRESA NORMALIZZATA EUROCONECTOR	67523300
BE01	HEADPHONE SOCKET PRISE CASQUE KOPFHOERERBUCHSE PRESA JACK TOMA JACK	20561540
BE03	CINCH SOCKET PRISE CINCH CHINCH-BUCHSE PRESA CINCH TOMA CINCH	30930090
BE05	CINCH SOCKET PRISE CINCH CHINCH-BUCHSE PRESA CINCH TOMA CINCH	20483820
BT01	CATHODE RAY TUBE SOCKET SUPPORT TUBE CATHODIQUE BILDROEHRENFASSUNG SUPPORTO TUBO CATODICO SOPORTE T.R.C	⚠ 20174620
FP01	1A6T TIME-LAG FUSE 1A6T FUSIBLE TEMPORISE 1A6T SICHERUNG 1A6T FUSIBILE TEMPORIZZATO 1A6T FUSIBLE TEMPORIZADO	⚠ 48064700
NH01	CTT5000T UHF/VHF TUNER CTT5000T TETE UHF/VHF CTT5000T UHF/VHF TUNER CTT5000T TUNER UHF/VHF CTT5000T SINTONIZADOR UHF/VHF	R 20808880
SK01,02,03,04	MICROSWITCH MICRO CONTACTEUR MIKROSCHALTER MICROINTERRUTTORE MICROCONTACTOR	10731200

EQUIPMENT/PRESENTATION
EQUIPEMENT/PRESENTATION
AUSSTATTUNG/GEHAEUSE
PARTI VARIE
EQUIPO/PRESENTACION

POWER SUPPLY LEAD CORDON D'ALIMENTATION NETZKABEL CAVO DI ALIMENTAZIONE CABLE DE ALIMENTACION	⚠ 20762980
ON/OFF BUTTON TOUCHE MARCHE/ARRET EIN-AUS TASTE TASTO ACCESO/SPENTO TECLA MARCHA/PARADA	20756850
BUTTON ASSY ENSEMBLE DE TOUCHES TASTENEINHEIT ASSIEME TASTI CONJUNTO DE TECLAS	20756830
REAR PANEL DOS RUECKWAND PANNELLO POSTERIORE TAPA POSTERIOR	⚠ 20756810
CABINET WITH FRONT PANEL COFFRET EQUIPE AVEC FACADE GEHAEUSE KPL MIT FRONTPLATTE MOBILE COMPLETO MUEBLE EQUIPADO	20756790
FOLDING BOX EMBALLAGE CARTON KARTON IMBALLAGGIO CARTONE EMBALAJE CARTON	2075622A
DEGAUSSSING COIL BOBINE DE DEMAGNETISATION ENTMAGNETISIERUNGSSPULE BOBINA DI SMAGNETIZZAZIONE BOBINA DE DESIMANTACION	⚠ 20613360
16R OHM 3W LOUDSPEAKER 40X70 16R OHM 3W HAUT PARLEUR 40X70 16R OHM 3W LAUTSPRECHER 40X70 16R OHM 3W ALTOPARLANTE 40X70 16R OHM 3W ALTAVOZ 40X70	2041186A
370KRB-TC38 CATHODE RAY TUBE 370KRB-TC38 TUBE CATHODIQUE 370KRB-TC38 FARBBILDROEHRE 370KRB-TC38 TUBO CATODICO 370KRB-TC38 T.R.C	⚠ 20240320
ON/OFF SWITCH CONTACTEUR MARCHE/ARRET EIN-AUS SCHALTER CONTATTORE ACCESO/SPENTO CONTACTOR MARCHA/PARADA	⚠ 20156490
HANDLE POIGNEE GRIFF MANIGLIA EMPUNADURA	2013048C
FITTING UPPER CALE SUPERIEURE POLSTER OBEN DISTANZIATORE SUPERIORE CALZO SUPERIOR	2013045C
FITTING DOWNER CALE INFERIEURE POLSTER UNTEN DISTANZIATORE INFERIORE CALZO INFERIOR	2013044B
TELESCOPIC ANTENNA ANTENNE TELESCOPIQUE TELESKOPANTENNE ANTENNA TELESCOPICA ANTENA TELESCOPICA	2008854A
RC1132 REMOTE CONTROL RC1132 TELECOMMANDE RC1132 FERNBEDIENUNG RC1132 TELECOMANDO RC1132 TELEMANDO	10286790

INSTRUCTIONS
NOTICES
ANLEITUNGEN
ISTRUZIONI
MANUALE

MG1470CT PARTS LIST MG1470CT LISTE DE PIECES DETACHEES MG1470CT ERSATZTEILLISTE MG1470CT LISTA PARTI DI RICAMBIO MG1470CT LISTA DE PIEZAS DE REPUESTO	35052760
TX91G SERVICE MANUAL (EUROPE) TX91G DOC TECHNIQUE (EUROPE) TX91G TECHNISCHE DOKUMENTATION (EUROPE) TX91G DOCUMENTAZIONE TECNICA (EUROPE) TX91G DOCUMENTACION TECNICA (EUROPE)	35041190
MG1470CT/MS2170CT UM TELEFUNKEN F MG1470CT/MS2170CT NU TELEFUNKEN F MG1470CT/MS2170CT BA TELEFUNKEN F MG1470CT/MS2170CT IU TELEFUNKEN F MG1470CT/MS2170CT IU TELEFUNKEN F	20756160

The description and characteristics given here are of informative significance only, and non committal. To keep up the high quality of our products, we reserve the right to make any changes or improvement without previous notice. • Les descriptions et caractéristiques figurant sur ce document sont données à titre d'information et non d'engagement. En effet, soucieux de la qualité de nos produits, nous nous réservons le droit d'effectuer, sans préavis, toute modification ou amélioration. • Die Beschreibungen und Daten in dieser Anleitung dienen nur zur Information und sind nicht bindend. Um die Qualität unserer Produkte ständig zu verbessern, behalten wir uns das Recht auf Änderungen vor. • Le descrizioni e le caratteristiche date su questo documento sono fornite a semplice titolo informativo e senza impegno. Ci riserviamo il diritto di eseguire, senza preavviso, qualsiasi modifica o miglioramento. • Las descripciones y características que figuran en este documento se dan a título de información y no de compromiso. En efecto, en bien de la calidad de nuestros productos, nos reservamos el derecho de efectuar, sin previo aviso, cualquier modificación o mejora.

THOMSON MULTIMEDIA 46, Quai Alphonse Le Gallo 92648 Boulogne Cedex FRANCE

THOMSON MULTI MEDIA

TV

Brandt FERGUSON **NORDMENDE** SABA **TELEFUNKEN** **THOMSON**

PARTS LIST
LISTE PIECES DETACHEES
ERSATZTEILLISTE
LISTA PARTI DI RICAMBIO
LISTA DE PIEZAS DE REPUESTO

FERGUSON
V51NB
Chassis TX91G

MODULES

MAIN	**TX91G2837250Q0**		
AMFM	**STEREO/NICAM**		**20684420**
CRT	**CRTTX9121"**	**R**	**20532040**
KB	**KDB907**		**25285380**
SCI	**SCARTTX91**		**20335250**

FP23,70	MP160	⚠	10457130
FP90	MP125	⚠	10469180
GR01	TFMK1330T		10132410
IC01	TDA4665T FLAT		10155740
IE01	M51320P		20321730
IE02	MC14053BCP		46006700
IF01	TDA1771		10044490
II01	STV8224A2		10451330
IN01	U4454B		50896820
IN03	TDA7263		10281150
IN04	MC78L08ACP		10308410
IN05	MN1381-S		10284050
IN20	MSP3410B-PP-F7		10372340
IN50	MC33164P-5		10277030
IR01	ST9293J9B1/HAK		20801180
IR02	TDA8139		10044580
IR03	ST24C04/B1		10030300
IT01	TEA5101B		10231440
IV01	STV2118B (CUT 5.1)		10384680
IX01	SAA5281ZP/E		10258810
IX02	MC7805/CT		46025200

TA06,**TF**21, **TI**32,**TK**02, **TR**01,04,05	BC847B SMD		11070770
TE01,03,04,05, **TN**06,**TX**01	BC558B		16001110
TE02,06,**TR**02	BC548B		16000930
TH02,**TL**01, **TN**04,07,**TP**22	BC337-40		45001466
TI01	MMBTH10L SMD		16006500
TI31,**TV**01	BC857B SMD		30946660
TL02	BUH515D		20666700
TL13	2SC2236Y		16000220
TN01	BF799 SMD		16005860
TN05	BC848B SMD		16006290
TN08	BC858B SMD		16006330
TP20	BUL512HI		10440310
TP23	MPS750		16001340
TP34	BC858C SMD		50854683
TX02	BC548C		16000940

DC01,**DP**34, **DR**07	BZX55C5V1		80444140
DE01,**DF**22, **DK**08,**DL**01,11, 20,23,**DP**25, **DR**05,**DT**21,41, 61,**DV**01,02,03, **DX**01,02,03,04	1N4148		44009209
DF01,**DL**07,08	1N4001		16008160
DF03,04	BZX55C11		11073670
DF21	BZX55C20		30948810
DH01	BZX55C30		80444170
DH02	BZX55C5V6/ZPD5,6		44025401
DK07	BZX55C6V8		50890650
DL02,04,05,06, 09,**DP**19,23,31, 32	RGP10G		10459090
DL12	BZX55B4V3		90578000
DL13	BZX55B9V1		70438220
DL21	ZPD6,8		44074501
DN03,04	BAV203 SMD		10222420
DN05	BZX55C9V1		90578100
DP01,02,03,04	BYW27-1000		10455390
DP29,37,38	LL4148 SMD		16012450
DP33	BZX85C27/ZPY27		10246740
DP70,90	RGP15G		10272800
DP80	STTB406		20768390
DR01	BZX55B13		50890560
DR04,**DT**01	ZPD8,2		44021504
DT23,43,63	BAV21		44044407
GE01	MV5491A LED		10036730

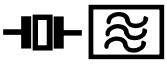

FN01	K9260M FOS		20232110
QC01	4M433619HZ		10087710
QC02	3M579545HZ		10087720
QI01	OFWG3965M FOS		10085120
QI31	6M0HZ		48042300
QN01	18M432HZ		10254070
QN10	18M432HZ		10334670
QR01	8M0HZ		10254430
QV01	503K0HZ		48023700
QX01	27M0HZ		20548370

FN03	31M9HZ		20498110
LI29	38M9HZ		10388320
LN01	38M9HZ		47309700

PI01	10K0 OHM		20351320
PP34	470R0 OHM		10260350

RE35	10R0 OHM 5% 0,30W		41005202
RF01	2R2 OHM 5% 0,30W	⚠	15009870
RF05	1R8 OHM 5% 0,50W		20649310
RF09	110K0 OHM 1% 0,25W		11061210
RH16,**RN**33,35, 46	10R0 OHM 5% 0,25W	⚠	15009580
RH17,**RX**01	27R0 OHM 5% 0,25W	⚠	15009840
RL07	1K0 OHM 10% 0,50W	⚠	10226290
RL08	33R0 OHM 5% 2W		15022830
RL09	8R2 OHM 10% 7W		70432630
RL11	15R0 OHM 5% 0,50W	⚠	10226280
RL12	0R47 OHM 5% 0,35W	⚠	10344260
RL13,14	0R22 OHM 5% 0,50W	⚠	10305450
RL16	82K0 OHM 1% 0,70W		10148310
RL22	75K0 OHM 1% 0,70W		10224620
RN37,38	4R7 OHM 5% 0,30W		15010020
RP01	5R1 OHM 10% 2,50W		10472390

R : RECYCLED PART
: PIECE RECYCLEE
: AUSTAUSCHTEILE
: RICAMBIO RICICLATO
: MODULO REPROCESADO

For any requests, please contact THOMSON multimedia after sales service area
Pour toutes précisions, contactez votre service apres vente local THOMSON multimedia
Für weitere Auskünfte, wenden Sie sich bitte an die THOMSON multimedia Kundendienste
Per precisazioni, contattare l'assistenza tecnica THOMSON multimedia
Para cualquier pregunta, por favor contactar con el responsable de zona del servicio postventa de THOMSON multimedia

07 / 97 **35044760**
REV. N° 0 00 / 00 **00000000**

No copying, translation, modification on other use authorized. All rights reserved worldwide. • Tous droits de reproduction, de traduction, d'adaptation et d'exécution réservés pour tous les pays. • Sämtliche Urheberrechte an diesen Texten und Zeichnungen Vervielfältigungen - auch auszugsweise - nur mit unserer vorherigen Zustimmung zulässig. Alle Rechte vorbehalten. • I diritti di riproduzione, di traduzione, e esecuzione sono riservati per tutti i paesi. • Derechos de reproduccion, de traduccion, de adap

RP02	25R0 OHM 220V PTC	⚠	30093400
RP15	10M0 OHM 5% 0,70W	⚠	10074320
RP20	1R0 OHM 5% 2,50W		10383240
RP44	1R0 OHM 5% 0,25W	⚠	15009730
RT01	47R0 OHM 5% 0,30W	⚠	15010010
RT02	15R0 OHM 5% 2W		13001350
RT03	10K0 OHM 5% 0,50W		40434960
RT23,43	68K0 OHM 5% 1W		10133770
RT25,45,65	2K2 OHM 5% 0,50W		30938220
RT48	2K2 OHM 5% 0,30W	⚠	41319509
RV02	56R0 OHM 5% 0,30W	⚠	15010060

CL04	7N2F 3,5% 1K6V		20153470
CL05	470N0F 5% 250V		43044300
CL08	6N8F 5% 400V		10158380
CL10,15	330P0F 20% 1K0V		14035270
CL17,**CP**13,91	330P0F 20% 400V		14002220
CP01,02	100N0F 20% 275V	⚠	10331520
CP03	68N0F 20% 250V	⚠	10256210
CP04	10N0F 20% 400V		13028200
CP05,06	4N7F 1K0V		10058740
CP10	100U0F 385V		30662900
CP15	1N0F 20% 400V	⚠	43106800
CP21	1N0F 10% 1K0V		43441400
CP24	10N0F 10% 100V		10279180
CP71	2N2F 10% 400V		10188880
CP79	470P0F 10% 3K0V		14006050
CT03	2N2F 2K0V		14036020

LL01	DRIVER		20609540
LL03		⚠	80367500
LL05	DSTL28	⚠	10462780
LP02		⚠	10395160
LP03	SMT17	⚠	10387120

OTHER PARTS
AUTRES PIECES
SONSTIGE TEILE
ALTRE PARTI
OTRAS PIEZAS

BE01,02	SCART SOCKET PRISE PERITEL EURO-AV-BUCHSE EUROPRESA NORMALIZZATA EUROCONECTOR		10357750
BT01	CATHODE RAY TUBE SOCKET SUPPORT TUBE CATHODIQUE BILDROEHRENFASSUNG SUPPORTO TUBO CATODICO SOPORTE T.R.C	⚠	20631370
FP01	1A6T TIME-LAG FUSE 1A6T FUSIBLE TEMPORISE 1A6T SICHERUNG 1A6T FUSIBILE TEMPORIZZATO 1A6T FUSIBLE TEMPORIZADO	⚠	48064700
NH01	CTT5000 UHF/VHF TUNER CTT5000 TETE UHF/VHF CTT5000 UHF/VHF TUNER CTT5000 TUNER UHF/VHF CTT5000 SINTONIZADOR UHF/VHF	R	20546960
SM01,02,03,04	MICROSWITCH MICRO CONTACTEUR MIKROSCHALTER MICROINTERRUTTORE MICROCONTACTOR		30011100
SP01	ON/OFF SWITCH CONTACTEUR MARCHE/ARRET EIN-AUS SCHALTER CONTATTORE ACCESO/SPENTO CONTACTOR MARCHA/PARADA	⚠	10175910

EQUIPMENT/PRESENTATION
EQUIPEMENT/PRESENTATION
AUSRUESTUNG/GEHAEUSE
PARTI VARIE
EQUIPO/PRESENTACION

FRONT PANEL FACADE FRONTPLATTE PANNELLO FRONTALE PANEL FRONTAL			25221520
REAR PANEL DOS RUECKWAND PANNELLO POSTERIORE TAPA POSTERIOR		⚠	25184660
16R OHM 5W LOUDSPEAKER 50X90 16R OHM 5W HAUT PARLEUR 50X90 16R OHM 5W LAUTSPRECHER 50X90 16R OHM 5W ALTOPARLANTE 50X90 16R OHM 5W ALTAVOZ 50X90			10317070
ON/OFF BUTTON TOUCHE MARCHE/ARRET EIN-AUS TASTE TASTO ACCESO SPENTO TECLA MARCHA PARADA			25172290
BUTTON STRIP BARRETTE DE TOUCHES TASTENLEISTE PIATTINA TASTI PLACA DE TECLAS			25158380
POWER SUPPLY LEAD CORDON D'ALIMENTATION NETZKABEL CAVO DI ALIMENTAZIONE CABLE DE ALIMENTACION		⚠	10260810
A51EBV13X01 CATHODE RAY TUBE A51EBV13X01 TUBE CATHODIQUE A51EBV13X01 FARBBILDROEHRE A51EBV13X01 TUBO CATODICO A51EBV13X01 T.R.C		⚠	10318920
DEGAUSSING COIL BOBINE DE DEMAGNETISATION ENTMAGNETISIERUNGSSPULE BOBINA DI SMAGNETIZZAZIONE BOBINA DE DESIMANTACION		⚠	47320195
F3090 REMOTE CONTROL F3090 TELECOMMANDE F3090 FERNBEDIENUNG F3090 TELECOMANDO F3090 TELEMANDO			10348550
FOLDING BOX EMBALLAGE CARTON KARTON IMBALLAGGIO CARTONE EMBALAJE CARTON			25196040
FITTING DOWNER CALE INFERIEURE POLSTER UNTEN DISTANZIATORE INFERIORE CALZO INFERIOR			25158410
FITTING UPPER CALE SUPERIEURE POLSTER OBEN DISTANZIATORE SUPERIORE CALZO SUPERIOR			25158400

INSTRUCTIONS
NOTICES
ANLEITUNGEN
ISTRUZIONI
MANUALE

V51NB PARTS LIST V51NB LISTE DE PIECES DETACHEES V51NB ERSATZTEILLISTE V51NB LISTA PARTI DI RICAMBIO V51NB LISTA DE PIEZAS DE REPUESTO		35044760
TX91G SERVICE MANUAL (EUROPE) TX91G DOC TECHNIQUE (EUROPE) TX91G TECHNISCHE DOKUMENTATION (EUROPE) TX91G DOCUMENTAZIONE TECNICA (EUROPE) TX91G DOCUMENTACION TECNICA (EUROPE)		35041190
T5173GF/V51NB UM FERGUSON GB T5173GF/V51NB NU FERGUSON GB T5173GF/V51NB BA FERGUSON GB T5173GF/V51NB IU FERGUSON GB T5173GF/V51NB IU FERGUSON GB		25292000

The description and characteristics given here are of informative significance only, and non committal. To keep up the high quality of our products, we reserve the right to make any changes or improvement without previous notice. • Les descriptions et caractéristiques figurant sur ce document sont données à titre d'information et non d'engagement. En effet, soucieux de la qualité de nos produits, nous nous réservons le droit d'effectuer, sans préavis, toute modification ou amélioration. • Die Beschreibungen und Daten in dieser Anleitung dienen nur zur Information und sind nicht bindend. Um die Qualität unserer Produkte ständig zu verbessern, behalten wir uns das Recht auf Änderungen vor. • Le descrizioni e le caratteristiche date su questo documento sono fornite a semplice titolo informativo e senza impegno. Ci riserviamo il diritto di eseguire, senza preavviso, qualsiasi modifica o miglioramento. • Las descripciones y características que figuran en este documento se dan a título de información y no de compromiso. En efecto, en bien de la calidad de nuestros productos, nos reservamos el derecho de efectuar, sin previo aviso, cualquier modificación o mejora.

THOMSON MULTIMEDIA 46, Quai Alphonse Le Gallo 92648 Boulogne Cedex FRANCE

THOMSON MULTI MEDIA

TV

Brandt FERGUSON NORDMENDE SABA TELEFUNKEN THOMSON

PARTS LIST
LISTE PIECES DETACHEES
ERSATZTEILLISTE
LISTA PARTI DI RICAMBIO
LISTA DE PIEZAS DE REPUESTO

THOMSON
14MS70CT
Chassis TX91G

MODULES

MAIN	**TX91G14"MPBPSBGHILL'**	
DVT	**DVTTX91G**	**20525850**
FCB	**FCBTX91G14"**	**20750610**

FP23,70	MP160	⚠ 10457130
FP90	MP125	⚠ 10469180
IA01	TDA7253	20203120
IC01	TDA4665	20335750
IF01	TDA1771	10044490
II01	STV8224A2	10451330
II02	STV8225	20165170
IK01	TFMK1330T	10132410
IR01	ST9293J9B1/HAI FM20A	20801170
IR02	TDA8139	10044580
IR03	ST24C04/B1	10030300
IV01	STV2118B (CUT 5.1)	10384680
IX01	SAA5281ZP/E	10258810
IX02	MC7805/CT	46025200

TA05,06,**TF**21, **TI**28,32,**TK**02, **TR**01,04,05	BC848B SMD	35030590
TH02	BC338-40	16000590
TI01	MMBTH10L SMD	16006500
TI03,04,30	DTC144EK SMD	16007030
TI31,**TV**01,02	BC858B SMD	16006330
TL01,**TP**22	BC337-40	45001466
TL02	BUH515D	20666700
TL13	2SC2236Y	16000220
TP20	BUL512HI	10440310
TP23	MPS750	16001340
TP34	BC858C SMD	50854683
TR02	BC548B	16000930
TT51,61,71	BF423	16003110
TT52,62,72	BF883S	10162190
TT81	BC807-40 SMD	16006220
TX01	BC558B	16001110
TX02	BC548C	16000940

DA05	BZX55B2V7	80444010
DC01,**DP**34, **DR**07	BZX55C5V1	80444140
DF01,**DL**07,08	1N4001	16008160
DF03,04	BZX55C11	11073670
DF21	BZX55C15	20475420
DF22,**DI**62, **DK**08,**DL**01,11, 20,23,**DP**25, **DR**05,**DT**50,60, 70,86,**DV**01,02, 03,**DX**01,02,03, 04	1N4148	44009209
DH01	BZX55C30	80444170
DH02	BZX55C5V6/ZPD5,6	44025401
DI33,34,50,51, 52,60	BA282	16007510
DK01	MV5491A LED	10036730
DK07	BZX55C6V8	50890650
DL02,04,05,06, **DP**19,23,31,32	RGP10G	10459090
DL12	BZX55B4V3	90578000
DL13	BZX55B9V1	70438220
DL21	ZPD6,8	44074501
DP01,02,03,04	BYW27-1000	10455390
DP29,37,38	LL4148 SMD	16012450
DP33	BZX85C27/ZPY27	10246740
DP70,90	RGP15G	10272800
DP80	BYW76	16009120
DR01	BZX55B13	50890560
DR04,**DT**85	ZPD8,2	44021504
DT51,61,71	BAV21	44044407
DV04	BZX55B8V2	40441820

QC01	4M433619HZ	10087710
QC02	3M579545HZ	10087720
QI01	OFWG1967M FOS	10247670
QI02	33M9HZ FOS	20489330
QI31	6M0HZ	48042300
QI32	5M5HZ	20336430
QI33	6M0HZ	48039700
QI34	5M74HZ	20338170
QR01	8M0HZ	10254430
QV01	503K0HZ	48023700
QX01	27M0HZ	20548370

LI29	38M9HZ	20310930
LI61	32M4HZ	20510040

PI01	10K0 OHM	20115670
PP34	470R0 OHM	10260350

RA25	1R0 OHM 5% 2W	20544230
RA26	470R0 OHM 5% 0,25W	15009980
RE12,**RR**20, **RT**68,**RV**04,06, 08,10	100R0 OHM 5% 0,25W	30943330
RF05	1R8 OHM 5% 0,50W	20649310
RF09	100K0 OHM 1% 0,25W	50883810
RH16	10R0 OHM 5% 0,25W	⚠ 15009580
RH17,**RX**01	27R0 OHM 5% 0,25W	⚠ 15009840
RL07	1K0 OHM 10% 0,50W	⚠ 10226290
RL08	33R0 OHM 5% 2W	15022830
RL09	8R2 OHM 10% 7W	70432630
RL11	15R0 OHM 5% 0,50W	⚠ 10226280
RL12,13	0R56 OHM 5% 0,50W	⚠ 10313110
RL16,22	82K0 OHM 1% 0,70W	10148310
RP01	5R1 OHM 10% 5W	20369640
RP02	25R0 OHM 220V PTC	⚠ 30093400
RP15	10M0 OHM 5% 0,70W	⚠ 20564520
RP20	1R0 OHM 5% 2,50W	10383240
RP44	1R0 OHM 5% 0,25W	⚠ 15009730
RR17	1K0 OHM 5% 0,25W	15006730
RT52,62,72	10K0 OHM 10% 2W	15022700
RV02	56R0 OHM 5% 0,30W	⚠ 15010060

CL04	7N0F 3,5% 1K5V	43326700

R : RECYCLED PART
: PIECE RECYCLEE
: AUSTAUSCHTEILE
: RICAMBIO RICICLATO
: MODULO REPROCESADO

For any requests, please contact THOMSON multimedia after sales service area
Pour toutes précisions, contactez votre service apres vente local THOMSON multimedia
Für weitere Auskünfte, wenden Sie sich bitte an die THOMSON multimedia Kundendienste
Per precisazioni, contattare l'assistenza tecnica THOMSON multimedia
Para cualquier pregunta, por favor contactar con el responsable de zona del servicio postventa de THOMSON multimedia

10 / 97 **35051860**
REV. N° 0 00 / 00 **00000000**
1/2

No copying, translation, modification on other use authorized. All rights reserved worldwide. • Tous droits de reproduction, de traduction, d'adaptation et d'exécution réservés pour tous les pays. • Sämtliche Urheberrechte an diesen Texten und Zeichnungen Vervielfältigungen - auch auszugsweise - nur mit unserer vorherigen Zustimmung zulässig. Alle Rechte vorbehalten. • I diritti di riproduzione, di traduzione, e esecuzione sono riservati per tutti i paesi. • Derechos de reproduccion, de traduccion, de adap

CL05	390N0F 10% 250V	43171400
CL06	680N0F 20% 160V	13076980
CL08	6N8F 5% 400V	10158380
CL09	1U0F 10% 160V	⚠ 20706480
CL10,15	330P0F 20% 1K0V	14035270
CL17,CP13,91	330P0F 20% 400V	14002220
CL18	270P0F 10% 2K0V	14036000
CP01,02	100N0F 20% 275V	⚠ 10331520
CP03	68N0F 20% 250V	10256210
CP04	10N0F 20% 400V	10094420
CP05,06	4N7F 1K0V	10058740
CP10	100U0F 385V	30662900
CP15	1N0F 20% 400V	⚠ 20822690
CP21	1N0F 10% 1K0V	⚠ 43441400
CP24	10N0F 10% 100V	10279180
CP71	2N2F 10% 400V	10188880
CP79	470P0F 10% 3K0V	14006050
CT82	2U2F 20% 250V	10190240
CT84	10N0F 20% 400V	14033040
CT85	1N0F 2K0V	14034870

LL01	DRIVER	20609540
LL03		⚠ 30909908
LL05	FCV1410E18	⚠ 20202880
LP02		⚠ 10395160
LP03	SMT17	⚠ 10387120

OTHER PARTS
AUTRES PIECES
SONSTIGE TEILE
ALTRE PARTI
OTRAS PIEZAS

BE01	SCART SOCKET PRISE PERITEL EURO-AV-BUCHSE EUROPRESA NORMALIZZATA EUROCONECTOR	67523300
BE01	HEADPHONE SOCKET PRISE CASQUE KOPFHOERERBUCHSE PRESA JACK TOMA JACK	20561540
BE04	CINCH SOCKET PRISE CINCH CINCH-BUCHSE PRESA CINCH TOMA CINCH	10337850
BE05	CINCH SOCKET PRISE CINCH CHINCH-BUCHSE PRESA CINCH TOMA CINCH	20483820
BT01	CATHODE RAY TUBE SOCKET SUPPORT TUBE CATHODIQUE BILDROEHRENFASSUNG SUPPORTO TUBO CATODICO SOPORTE T.R.C	⚠ 20174620
FP01	1A6T TIME-LAG FUSE 1A6T FUSIBLE TEMPORISE 1A6T SICHERUNG 1A6T FUSIBILE TEMPORIZZATO 1A6T FUSIBLE TEMPORIZADO	⚠ 48064700
NH01	CTT5000T UHF/VHF TUNER CTT5000T TETE UHF/VHF CTT5000T UHF/VHF TUNER CTT5000T TUNER UHF/VHF CTT5000T SINTONIZADOR UHF/VHF	R 20808880
SK01,02,03,04	MICROSWITCH MICRO CONTACTEUR MIKROSCHALTER MICROINTERRUTORE MICROCONTACTOR	10510600
SP05	ON/OFF SWITCH CONTACTEUR MARCHE/ARRET EIN-AUS SCHALTER CONTATTORE ACCESO/SPENTO CONTACTOR MARCHA/PARADA	⚠ 20612390

EQUIPMENT/PRESENTATION
EQUIPEMENT/PRESENTATION
AUSSTATTUNG/GEHAEUSE
PARTI VARIE
EQUIPO/PRESENTACION

POWER SUPPLY LEAD CORDON D'ALIMENTATION NETZKABEL CAVO DI ALIMENTAZIONE CABLE DE ALIMENTACION	⚠ 20351830
16R OHM 3W LOUDSPEAKER 40X70 16R OHM 3W HAUT PARLEUR 40X70 16R OHM 3W LAUTSPRECHER 40X70 16R OHM 3W ALTOPARLANTE 40X70 16R OHM 3W ALTAVOZ 40X70	2041186A
370KRB22-TC38 CATHODE RAY TUBE 370KRB22-TC38 TUBE CATHODIQUE 370KRB22-TC38 FARBBILDROEHRE 370KRB22-TC38 TUBO CATODICO 370KRB22-TC38 T.R.C	⚠ 11006933
CABINET WITH FRONT PANEL COFFRET EQUIPE AVEC FACADE GEHAEUSE KPL MIT FRONTPLATTE MOBILE COMPLETO MUEBLE EQUIPADO	20770420
BUTTON STRIP BARRETTE DE TOUCHES TASTENLEISTE ASSIEME TASTI PLACA DE TECLAS	20770380
ON/OFF BUTTON TOUCHE MARCHE/ARRET EIN-AUS TASTE TASTO ACCESO/SPENTO TECLA MARCHA/PARADA	20770340
REAR PANEL DOS RUECKWAND PANNELLO POSTERIORE TAPA POSTERIOR	⚠ 20770450
TELESCOPIC ANTENNA ANTENNE TELESCOPIQUE TELESKOPANTENNE ANTENNA TELESCOPICA ANTENA TELESCOPICA	40290100
FITTING UPPER CALE SUPERIEURE POLSTER OBEN DISTANZIATORE SUPERIORE CALZO SUPERIOR	20770160
FITTING DOWNER CALE INFERIEURE POLSTER UNTEN DISTANZIATORE INFERIORE CALZO INFERIOR	20770240
FOLDING BOX EMBALLAGE CARTON KARTON IMBALLAGGIO CARTONE EMBALAJE CARTON	20866340
DEGAUSSSING COIL BOBINE DE DEMAGNETISATION ENTMAGNETISIERUNGSSPULE BOBINA DI SMAGNETIZZAZIONE BOBINA DE DESIMANTACION	⚠ 20613360

INSTRUCTIONS
NOTICES
ANLEITUNGEN
ISTRUZIONI
MANUALE

14MS70CT PARTS LIST 14MS70CT LISTE DE PIECES DETACHEES 14MS70CT ERSATZTEILLISTE 14MS70CT LISTA PARTI DI RICAMBIO 14MS70CT LISTA DE PIEZAS DE REPUESTO	35051860
TX91G SERVICE MANUAL (EUROPE) TX91G DOC TECHNIQUE (EUROPE) TX91G TECHNISCHE DOKUMENTATION (EUROPE) TX91G DOCUMENTAZIONE TECNICA (EUROPE) TX91G DOCUMENTACION TECNICA (EUROPE)	35041190
14MS70CT UM THOMSON F 14MS70CT NU THOMSON F 14MS70CT BA THOMSON F 14MS70CT IU THOMSON F 14MS70CT IU THOMSON F	20735320

The description and characteristics given here are of informative significance only, and non committal. To keep up the high quality of our products, we reserve the right to make any changes or improvement without previous notice. • Les descriptions et caractéristiques figurant sur ce document sont données à titre d'information et non d'engagement. En effet, soucieux de la qualité de nos produits, nous nous réservons le droit d'effectuer, sans préavis, toute modification ou amélioration. • Die Beschreibungen und Daten in dieser Anleitung dienen nur zur Information und sind nicht bindend. Um die Qualität unserer Produkte ständig zu verbessern, behalten wir uns das Recht auf Änderungen vor. • Le descrizioni e le caratteristiche date su questo documento sono fornite a semplice titolo informativo e senza impegno. Ci riserviamo il diritto di eseguire, senza preavviso, qualsiasi modifica o miglioramento. • Las descripciones y características que figuran en este documento se dan a título de información y no de compromiso. En efecto, en bien de la calidad de nuestros productos, nos reservamos el derecho de efectuar, sin previo aviso, cualquier modificación o mejora.

THOMSON MULTIMEDIA 46, Quai Alphonse Le Gallo 92648 Boulogne Cedex FRANCE

THOMSON MULTI MEDIA

TV

Brandt FERGUSON **NORDMENDE** SABA **TELEFUNKEN** **THOMSON**

PARTS LIST
LISTE PIECES DETACHEES
ERSATZTEILLISTE
LISTA PARTI DI RICAMBIO
LISTA DE PIEZAS DE REPUESTO

THOMSON
14MS76CT
Chassis TX91G

MODULES

MAIN	**TX91G14"MPBPSBGDKK'**	
DVT	**DVTTX91G**	**20525850**
FCB	**FCBTX91G14"**	**20750610**

FP23,70	MP160	⚠ 10457130
FP90	MP125	⚠ 10469180
IA01	TDA7253	20203120
IC01	TDA4665	20335750
IF01	TDA1771	10044490
II01	STV8224A2	10451330
IK01	TFMK1330T	10132410
IR01	ST9293J9B1/HAI FM20A	20801170
IR02	TDA8139	10044580
IR03	ST24C04/B1	10030300
IV01	STV2118B (CUT 5.1)	10384680
IX01	SAA5281ZP/E	10258810
IX02	MC7805/CT	46025200

TA05,06,**TF**21, **TI**02,32,**TK**02, **TR**01,04,05	BC848B SMD	35030590
TH02	BC338-40	16000590
TI01	MMBTH10L SMD	16006500
TI30	DTC144EK SMD	16007030
TI31,**TV**01,02	BC858B SMD	16006330
TL01,**TP**22	BC337-40	45001466
TL02	BUH515D	20666700
TL13	2SC2236Y	16000220
TP20	BUL512HI	10440310
TP23	MPS750	16001340
TP34	BC858C SMD	50854683
TR02	BC548B	16000930
TT51,61,71	BF423	16003110
TT52,62,72	BF883S	10162190
TT81	BC807-40 SMD	16006220
TX01	BC558B	16001110
TX02	BC548C	16000940

DA05	BZX55B2V7	80444010
DC01,**DP**34, **DR**07	BZX55C5V1	80444140
DF01,**DL**07,08	1N4001	16008160
DF03,04	BZX55C11	11073670
DF21	BZX55C15	20475420
DF22,**DK**08, **DL**01,11,20,23, **DP**25,**DR**05, **DT**50,60,70,86, **DV**01,02,03, **DX**01,02,03,04	1N4148	44009209
DH01	BZX55C30	80444170
DH02	BZX55C5V6/ZPD5,6	44025401
DI33,34,60	BA282	16007510
DK01	MV5491A LED	10036730
DK07	BZX55C6V8	50890650
DL02,04,05,06, **DP**19,23,31,32	RGP10G	10459090
DL12	BZX55B4V3	90578000
DL13	BZX55B9V1	70438220
DL21	ZPD6,8	44074501
DP01,02,03,04	BYW27-1000	10455390
DP29,37,38	LL4148 SMD	16012450
DP33	BZX85C27/ZPY27	10246740
DP70,90	RGP15G	10272800
DP80	BYW76	16009120
DR01	BZX55B13	50890560
DR04,**DT**85	ZPD8,2	44021504
DT51,61,71	BAV21	44044407
DV04	BZX55B8V2	40441820

QC01	4M433619HZ	10087710
QC02	3M579545HZ	10087720
QI01	K2955M FOS	20258810
QI31	6M5HZ	20356510
QI32	5M5HZ	20336430
QI33	6M5HZ	20356470
QI34	5M74HZ	20338170
QR01	8M0HZ	10254430
QV01	503K0HZ	48023700
QX01	27M0HZ	20548370

LI29	38M9HZ	20310930
LI61	29M65HZ	20382370

PI01	10K0 OHM	20115670
PP34	470R0 OHM	10260350

RA25	1R0 OHM 5% 2W	20544230
RA26	470R0 OHM 5% 0,25W	⚠ 15009980
RE12,**RR**20, **RT**68,**RV**04,06, 08,10	100R0 OHM 5% 0,25W	30943330
RF05	1R8 OHM 5% 0,50W	20649310
RF09	100K0 OHM 1% 0,25W	50883810
RF16	1K0 OHM 5% 0,25W	⚠ 15006730
RH16	10R0 OHM 5% 0,25W	⚠ 15009580
RH17,**RX**01	27R0 OHM 5% 0,25W	⚠ 15009840
RL07	1K0 OHM 10% 0,50W	⚠ 10226290
RL08	33R0 OHM 5% 2W	15022830
RL09	8R2 OHM 10% 7W	70432630
RL11	15R0 OHM 5% 0,50W	⚠ 10226280
RL12,13	0R56 OHM 5% 0,50W	⚠ 10313110
RL16,22	82K0 OHM 1% 0,70W	10148310
RP01	5R1 OHM 10% 5W	20369640
RP02	25R0 OHM 220V PTC	⚠ 30093400
RP15	10M0 OHM 5% 0,70W	⚠ 20564520
RP20	1R0 OHM 5% 2,50W	10383240
RP44	1R0 OHM 5% 0,25W	⚠ 15009730
RT52,62,72	10K0 OHM 10% 2W	15022700
RV02	56R0 OHM 5% 0,30W	⚠ 15010060

CL04	7N0F 3,5% 1K5V	43326700
CL05	390N0F 10% 250V	43171400
CL06	680N0F 20% 160V	13076980
CL08	6N8F 5% 400V	10158380
CL09	1U0F 10% 160V	⚠ 20706480

R : RECYCLED PART
: PIECE RECYCLEE
: AUSTAUSCHTEILE
: RICAMBIO RICICLATO
: MODULO REPROCESADO

For any requests, please contact THOMSON multimedia after sales service area
Pour toutes précisions, contactez votre service apres vente local THOMSON multimedia
Für weitere Auskünfte, wenden Sie sich bitte an die THOMSON multimedia Kundendienste
Per precisazioni, contattare l'assistenza tecnica THOMSON multimedia
Para cualquier pregunta, por favor contactar con el responsable de zona del servicio postventa de THOMSON multimedia

No copying, translation, modification on other use authorized. All rights reserved worldwide. • Tous droits de reproduction, de traduction, d'adaptation et d'exécution réservés pour tous les pays. • Sämtliche Urheberrechte an diesen Texten und Zeichnungen Vervielfältigungen - auch auszugsweise - nur mit unserer vorherigen Zustimmung zulässig. Alle Rechte vorbehalten. • I diritti di riproduzione, di traduzione, e esecuzione sono riservati per tutti i paesi. • Derechos de reproduccion, de traduccion, de adap

CL10,15	330P0F 20% 1K0V	14035270
CL17,CP13,91	330P0F 20% 400V	14002220
CL18	270P0F 10% 2K0V	14036000
CP01,02	100N0F 20% 275V ⚠	10331520
CP03	68N0F 20% 250V	10256210
CP04	10N0F 20% 400V	10094420
CP05,06	4N7F 1K0V	10058740
CP10	100U0F 385V	30662900
CP15	1N0F 20% 400V ⚠	20822690
CP21	1N0F 10% 1K0V ⚠	43441400
CP24	10N0F 10% 100V	10279180
CP71	2N2F 400V	10078890
CP79	470P0F 10% 3K0V	14006050
CT82	2U2F 20% 250V	10190240
CT84	10N0F 20% 400V	14033040
CT85	1N0F 2K0V	14034870

LL01	DRIVER	20609540
LL03	⚠	30909908
LL05	FCV1410E18 ⚠	20202880
LP02	⚠	10395160
LP03	SMT17 ⚠	10387120

OTHER PARTS
AUTRES PIECES
SONSTIGE TEILE
ALTRE PARTI
OTRAS PIEZAS

BE01	SCART SOCKET PRISE PERITEL EURO-AV-BUCHSE EUROPRESA NORMALIZZATA EUROCONECTOR	67523300
BE01	HEADPHONE SOCKET PRISE CASQUE KOPFHOERERBUCHSE PRESA JACK TOMA JACK	20561540
BE04	CINCH SOCKET PRISE CINCH CHINCH-BUCHSE PRESA CINCH TOMA CINCH	10337850
BE05	CINCH SOCKET PRISE CINCH CHINCH-BUCHSE PRESA CINCH TOMA CINCH	20483820
BT01	CATHODE RAY TUBE SOCKET ⚠ SUPPORT TUBE CATHODIQUE BILDROEHRENFASSUNG SUPPORTO TUBO CATODICO SOPORTE T.R.C	20174620
FP01	1A6T TIME-LAG FUSE ⚠ 1A6T FUSIBLE TEMPORISE 1A6T SICHERUNG 1A6T FUSIBILE TEMPORIZZATO 1A6T FUSIBLE TEMPORIZADO	48064700
NH01	CTT5000T UHF/VHF TUNER R CTT5000T TETE UHF/VHF CTT5000T UHF/VHF TUNER CTT5000T TUNER UHF/VHF CTT5000T SINTONIZADOR UHF/VHF	20808880
SK01,02,03,04	MICROSWITCH MICRO CONTACTEUR MIKROSCHALTER MICROINTERRUTORE MICROCONTACTOR	10510600
SP05	ON/OFF SWITCH ⚠ CONTACTEUR MARCHE/ARRET EIN-AUS SCHALTER CONTATTORE ACCESO/SPENTO CONTACTOR MARCHA/PARADA	20612390

EQUIPMENT/PRESENTATION
EQUIPEMENT/PRESENTATION
AUSSTATTUNG/GEHAEUSE
PARTI VARIE
EQUIPO/PRESENTACION

POWER SUPPLY LEAD ⚠ CORDON D'ALIMENTATION NETZKABEL CAVO DI ALIMENTAZIONE CABLE DE ALIMENTACION	20351830
16R OHM 3W LOUDSPEAKER 40X70 16R OHM 3W HAUT PARLEUR 40X70 16R OHM 3W LAUTSPRECHER 40X70 16R OHM 3W ALTOPARLANTE 40X70 16R OHM 3W ALTAVOZ 40X70	2041186A
370KRB22-TC38 CATHODE RAY TUBE ⚠ 370KRB22-TC38 TUBE CATHODIQUE 370KRB22-TC38 FARBBILDROEHRE 370KRB22-TC38 TUBO CATODICO 370KRB22-TC38 T.R.C	11006933
FRONT PANEL FACADE FRONTPLATTE PANNELLO FRONTALE PANEL FRONTAL	20770420
BUTTON STRIP BARRETTE DE TOUCHES TASTENLEISTE ASSIEME TASTI PLACA DE TECLAS	20770380
ON/OFF BUTTON TOUCHE MARCHE/ARRET EIN-AUS TASTE TASTO ACCESO/SPENTO TECLA MARCHA/PARADA	20770340
REAR PANEL ⚠ DOS RUECKWAND PANNELLO POSTERIORE TAPA POSTERIOR	20770450
TELESCOPIC ANTENNA ANTENNE TELESCOPIQUE TELESKOPANTENNE ANTENNA TELESCOPICA ANTENA TELESCOPICA	40290100
FITTING UPPER CALE SUPERIEURE POLSTER OBEN DISTANZIATORE SUPERIORE CALZO SUPERIOR	20770160
FITTING DOWNER CALE INFERIEURE POLSTER UNTEN DISTANZIATORE INFERIORE CALZO INFERIOR	20770240
FOLDING BOX EMBALLAGE CARTON KARTON IMBALLAGGIO CARTONE EMBALAJE CARTON	20866340
RCT3003 REMOTE CONTROL RCT3003 TELECOMMANDE RCT3003 FERNBEDIENUNG RCT3003 TELECOMANDO RCT3003 TELEMANDO	10292960
DEGAUSSSING COIL ⚠ BOBINE DE DEMAGNETISATION ENTMAGNETISIERUNGSSPULE BOBINA DI SMAGNETIZZAZIONE BOBINA DE DESIMANTACION	20613360

INSTRUCTIONS
NOTICES
ANLEITUNGEN
ISTRUZIONI
MANUALE

14MS76CT PARTS LIST 14MS76CT LISTE DE PIECES DETACHEES 14MS76CT ERSATZTEILLISTE 14MS76CT LISTA PARTI DI RICAMBIO 14MS76CT LISTA DE PIEZAS DE REPUESTO	35052820
TX91G SERVICE MANUAL (EUROPE) TX91G DOC TECHNIQUE (EUROPE) TX91G TECHNISCHE DOKUMENTATION (EUROPE) TX91G DOCUMENTAZIONE TECNICA (EUROPE) TX91G DOCUMENTACION TECNICA (EUROPE)	35041190
14MS76CT UM TH D/I/DK/S/GB/E/P/GR/PL/H/CZ 14MS76CT NU TH D/I/DK/S/GB/E/P/GR/PL/H/CZ 14MS76CT BA TH D/I/DK/S/GB/E/P/GR/PL/H/CZ 14MS76CT IU TH D/I/DK/S/GB/E/P/GR/PL/H/CZ 14MS76CT IU TH D/I/DK/S/GB/E/P/GR/PL/H/CZ	20722980

The description and characteristics given here are of informative significance only, and non committal. To keep up the high quality of our products, we reserve the right to make any changes or improvement without previous notice. • Les descriptions et caractéristiques figurant sur ce document sont données à titre d'information et non d'engagement. En effet, soucieux de la qualité de nos produits, nous nous réservons le droit d'effectuer, sans préavis, toute modification ou amélioration. • Die Beschreibungen und Daten in dieser Anleitung dienen nur zur Information und sind nicht bindend. Um die Qualität unserer Produkte ständig zu verbessern, behalten wir uns das Recht auf Änderungen vor. • Le descrizioni e le caratteristiche date su questo documento sono fornite a semplice titolo informativo e senza impegno. Ci riserviamo il diritto di eseguire, senza preavviso, qualsiasi modifica o miglioramento. • Las descripciones y características que figuran en este documento se dan a título de información y no de compromiso. En efecto, en bien de la calidad de nuestros productos, nos reservamos el derecho de efectuar, sin previo aviso, cualquier modificación o mejora.

THOMSON MULTIMEDIA 46, Quai Alphonse Le Gallo 92648 Boulogne Cedex FRANCE

THOMSON MULTI MEDIA

TV

Brandt FERGUSON NORDMENDE SABA TELEFUNKEN THOMSON

PARTS LIST
LISTE PIECES DETACHEES
ERSATZTEILLISTE
LISTA PARTI DI RICAMBIO
LISTA DE PIEZAS DE REPUESTO

SABA
M5570GF
Chassis TX91G

MODULES

MAIN	**TX91G3830250Q0**		
AMFM	**STEREO/NICAM**	**R**	**20684400**
CRT	**CRTTX9114"**	**R**	**20590240**
KDB	**KDB910**		**25298770**
SCI	**SCARTTX91**		**20335250**

FP23,70	MP160	⚠	10457130
FP90	MP125	⚠	10469180
GR001	TFMK1330T		10132410
IC01	TDA4665T FLAT		10155740
IE01	M51320P		20321730
IE02	MC14053BCP		46006700
IF01	TDA1771		10044490
II01	STV8224A2		10451330
II02	STV8225		20165170
IN01	U4454B		50896820
IN020	MSP3410B-PP-F7		10372340
IN03	TDA7263		10281150
IN04	MC78L08ACP		10308410
IN050	MC33164P-5		10277030
IR01	ST9293J9B1/HAK		20801180
IR02	TDA8139		10044580
IR03	ST24C04/B1		10030300
IT01	TEA5101B		10231440
IV01	STV2118B (CUT 5.1)		10384680
IX01	SAA5281ZP/E		10258810
IX02	MC7805/CT		46025200

TA06,**TF**21, **TI**28,32,**TK**02, **TR**01,04,05	BC847B SMD	11070770
TE01,03,04,05, **TN**06,**TX**01	BC558B	16001110
TE02,06,**TR**02	BC548B	16000930
TH02,**TL**01, **TN**04,07,**TP**22	BC337-40	45001466
TI01	MMBTH10L SMD	16006500
TI03,04	DTC144EK SMD	16007030
TI31,**TV**01	BC857B SMD	30946660
TL02	BUH515D	20666700
TL13	2SC2236Y	16000220
TN01	BF799 SMD	35031670
TN05	BC848B SMD	16006290
TN08	BC858B SMD	16006330
TP20	BUL512HI	10440310
TP23	MPS750	16001340
TP34	BC858C SMD	50854683
TX02	BC548C	16000940

DC01,**DP**34, **DR**07	BZX55C5V1	80444140
DE01,**DF**22, **DI**62,**DK**08, **DL**01,11,20,23, **DP**25,**DR**05, **DT**21,41,61, **DV**01,02,03, **DX**01,02,03,04	1N4148	44009209
DF01,**DL**07,08	1N4001	16008160
DF03,04	BZX55C11	11073670
DF21	BZX55C20	30948810
DH01	BZX55C30	80444170
DH02	BZX55C5V6/ZPD5,6	44025401
DI50,51,52,60	BA282	16007510
DK07	BZX55C6V8	50890650
DL02,04,05,06, 09,**DP**19,23,31, 32	RGP10G	10459090
DL12	BZX55B4V3	90578000
DL13	BZX55B9V1	70438220
DL21	ZPD6,8	44074501
DN03,04	BAV103 SMD	10155030
DN05	BZX55C9V1	90578100
DP01,02,03,04	BYW27-1000	10455390
DP29,37,38	LL4148 SMD	16012450
DP33	BZX85C27/ZPY27	10246740
DP70,90	RGP15G	10272800
DP80	STTB406	20768390
DR01	BZX55B13	50890560
DR04,**DT**01	ZPD8,2	44021504
DT23,43,63	BAV21	44044407
GE001	MV5491A LED	10036730

FN010	TSB5304 FOS		80138400
FN02	6M5HZ		20356510
QC01	4M433619HZ		10087710
QC02	3M579545HZ		10087720
QI01	OFWG3965M FOS		10085120
QI02	33M9HZ FOS		20489330
QI31	6M0HZ		48042300
QI34	5M74HZ		20338170
QN010	18M432HZ		10334670
QR01	8M0HZ		10254430
QV01	503K0HZ		48023700
QX01	27M0HZ		20548370

FN93	31M9HZ		20498110
LI29	38M9HZ		10388320
LI61	32M4HZ		2031091A
LN01	38M9HZ		47309700

PI01	10K0 OHM		20351320
PP34	470R0 OHM		10260350

RE35,**RH**16	10R0 OHM 5% 0,25W	⚠	15009580
RF09	110K0 OHM 1% 0,25W		11061210
RH17,**RX**01	27R0 OHM 5% 0,25W	⚠	15009840
RL07	1K0 OHM 10% 0,50W	⚠	10226290
RL08	33R0 OHM 5% 2W		15022830
RL09	8R2 OHM 10% 7W		70432630
RL11	15R0 OHM 5% 0,50W	⚠	10226280
RL12	0R47 OHM 5% 0,35W	⚠	10344260
RL13,14	0R22 OHM 5% 0,50W	⚠	10305450
RL16	82K0 OHM 1% 0,70W		10148310
RL22	75K0 OHM 1% 0,70W		10224620
RN33,35,46	12R0 OHM 5% 0,25W	⚠	41023700
RN37,38	4R7 OHM 5% 0,25W	⚠	35032200
RP01	5R1 OHM 10% 2,50W		10472390

R : RECYCLED PART
: PIECE RECYCLEE
: AUSTAUSCHTEILE
: RICAMBIO RICICLATO
: MODULO REPROCESADO

For any requests, please contact THOMSON multimedia after sales service area
Pour toutes précisions, contactez votre service apres vente local THOMSON multimedia
Für weitere Auskünfte, wenden Sie sich bitte an die THOMSON multimedia Kundendienste
Per precisazioni, contattare l'assistenza tecnica THOMSON multimedia
Para cualquier pregunta, por favor contactar con el responsable de zona del servicio postventa de THOMSON multimedia

09 / 97 **35049900**
REV. N° 0 00 / 00 **00000000**

No copying, translation, modification on other use authorized. All rights reserved worldwide. • Tous droits de reproduction, de traduction, d'adaptation et d'exécution réservés pour tous les pays. • Sämtliche Urheberrechte an diesen Texten und Zeichnungen Vervielfältigungen - auch auszugsweise - nur mit unserer vorherigen Zustimmung zulässig. Alle Rechte vorbehalten. • I diritti di riproduzione, di traduzione, e esecuzione sono riservati per tutti i paesi. • Derechos de reproduccion, de traduccion, de adap

RP02	25R0 OHM 220V PTC	⚠	30093400
RP15	10M0 OHM 5% 0,70W	⚠	10074320
RP20	1R0 OHM 5% 2,50W		10383240
RP44	1R0 OHM 5% 0,25W	⚠	15009730
RT01	47R0 OHM 5% 0,30W	⚠	15010010
RT02	15R0 OHM 5% 2W		13001350
RT03	10K0 OHM 5% 0,50W		40434960
RT23,43	68K0 OHM 5% 1W		10133770
RT25,45,65	2K2 OHM 5% 0,50W		30938220
RT48	2K2 OHM 5% 0,30W	⚠	41319509
RV02	56R0 OHM 5% 0,30W	⚠	15010060

CL04	7N2F 3,5% 1K6V		20153470
CL05	470N0F 5% 250V		43044300
CL10,15	330P0F 20% 1K0V		14035270
CL17,**CP**13,91	330P0F 20% 400V		14002220
CP01,02	100N0F 20% 275V	⚠	10331520
CP05,06	4N7F 1K0V		10058740
CP10	100U0F 385V		30662900
CP15	1N0F 20% 400V	⚠	43106800
CP21	1N0F 10% 1K0V		43441400
CP24	10N0F 10% 100V		10279180
CP71	2N2F 10% 400V		10188880
CP79	470P0F 10% 3K0V		14006050
CT03	2N2F 2K0V		14036020

LL01	DRIVER		20609540
LL03		⚠	80367500
LL05	DSTL28	⚠	10462780
LP02		⚠	10395160
LP03	SMT17	⚠	10387120

OTHER PARTS
AUTRES PIECES
SONSTIGE TEILE
ALTRE PARTI
OTRAS PIEZAS

BE01,02	SCART SOCKET PRISE PERITEL EURO-AV-BUCHSE EUROPRESA NORMALIZZATA EUROCONECTOR		10357750
BM012	HEADPHONE PLUG PRISE CASQUE BUCHSE KOPFHOERER PRESA JACK TOMA JACK		10092250
BT01	CATHODE RAY TUBE SOCKET SUPPORT TUBE CATHODIQUE BILDROEHRENFASSUNG SUPPORTO TUBO CATODICO SOPORTE T.R.C	⚠	20631370
FP01	1A6T TIME-LAG FUSE 1A6T FUSIBLE TEMPORISE 1A6T SICHERUNG 1A6T FUSIBILE TEMPORIZZATO 1A6T FUSIBLE TEMPORIZADO	⚠	48064700
NH01	CTT5000T UHF/VHF TUNER CTT5000T TETE UHF/VHF CTT5000T UHF/VHF TUNER CTT5000T TUNER UHF/VHF CTT5000T SINTONIZADOR UHF/VHF	R	20808880
SM001,002, 003,004	MICROSWITCH MICRO CONTACTEUR MIKROSCHALTER MICROINTERRUTTORE MICROCONTACTOR		30011100
SP001	ON/OFF SWITCH CONTACTEUR MARCHE/ARRET EIN-AUS SCHALTER CONTATTORE ACCESO/SPENTO CONTACTOR MARCHA/PARADA	⚠	10276500

EQUIPMENT/PRESENTATION
EQUIPEMENT/PRESENTATION
AUSSTATTUNG/GEHAEUSE
PARTI VARIE
EQUIPO/PRESENTACION

CABINET WITH FRONT PANEL COFFRET EQUIPE AVEC FACADE GEHAEUSE KPL MIT FRONTPLATTE MOBILE COMPLETO MUEBLE EQUIPADO			25232670
16R OHM 5W LOUDSPEAKER 50X90 16R OHM 5W HAUT PARLEUR 50X90 16R OHM 5W LAUTSPRECHER 50X90 16R OHM 5W ALTOPARLANTE 50X90 16R OHM 5W ALTAVOZ 50X90			10317070
REAR PANEL DOS RUECKWAND PANNELLO POSTERIORE TAPA POSTERIOR		⚠	25309620
POWER SUPPLY LEAD CORDON D'ALIMENTATION NETZKABEL CAVO DI ALIMENTAZIONE CABLE DE ALIMENTACION		⚠	10260880
ON/OFF BUTTON TOUCHE MARCHE/ARRET EIN-AUS TASTE TASTO ACCESO/SPENTO TECLA MARCHA/PARADA			25150580
BUTTON STRIP BARRETTE DE TOUCHES TASTENLEISTE PIATTINA TASTI PLACA DE TECLAS			25150570
CHASSIS SUPPORT SUPPORT CHASSIS CHASSIS HALTER SUPPORTO CHASSIS SOPORTE CHASSIS			25179140
A51EBV13X01 CATHODE RAY TUBE A51EBV13X01 TUBE CATHODIQUE A51EBV13X01 FARBBILDROEHRE A51EBV13X01 TUBO CATODICO A51EBV13X01 T.R.C		⚠	10318920
DEGAUSSING COIL BOBINE DE DEMAGNETISATION ENTMAGNETISIERUNGSSPULE BOBINA DI SMAGNETIZZAZIONE BOBINA DE DESIMANTACION		⚠	47320195
INFRARED WINDOW GLACE INFRAROUGE INFRAROT FENSTER VETRO INFRAROSSO CRISTAL INFRARROJO			25142350
TC3003 REMOTE CONTROL TC3003 TELECOMMANDE TC3003 FERNBEDIENUNG TC3003 TELECOMANDO TC3003 TELEMANDO			10528890
FOLDING BOX EMBALLAGE CARTON KARTON IMBALLAGGIO CARTONE EMBALAJE CARTON			25284660
FITTING UPPER CALE SUPERIEURE POLSTER OBEN DISTANZIATORE SUPERIORE CALZO SUPERIOR			25184550
FITTING DOWNER CALE INFERIEURE POLSTER UNTEN DISTANZIATORE INFERIORE CALZO INFERIOR			25184530

INSTRUCTIONS
NOTICES
ANLEITUNGEN
INSTRUCZIONI
MANUALE

M5570GF PARTS LIST M5570GF LISTE DE PIECES DETACHEES M5570GF ERSATZTEILLISTE M5570GF LISTA PARTI DI RICAMBIO M5570GF LISTA DE PIEZAS DE REPUESTO		35049900
TX91G SERVICE MANUAL (EUROPE) TX91G DOC TECHNIQUE (EUROPE) TX91G TECHNISCHE DOKUMENTATION (EUROPE) TX91G DOCUMENTAZIONE TECNICA (EUROPE) TX91G DOCUMENTACION TECNICA (EUROPE)		35041190
M5570GF UM SABA F/I/D/GB/NL/E/P M5570GF NU SABA F/I/D/GB/NL/E/P M5570GF BA SABA F/I/D/GB/NL/E/P M5570GF IU SABA F/I/D/GB/NL/E/P M5570GF IU SABA F/I/D/GB/NL/E/P		25314300

The description and characteristics given here are of informative significance only, and non committal. To keep up the high quality of our products, we reserve the right to make any changes or improvement without previous notice. • Les descriptions et caractéristiques figurant sur ce document sont données à titre d'information et non d'engagement. En effet, soucieux de la qualité de nos produits, nous nous réservons le droit d'effectuer, sans préavis, toute modification ou amélioration. • Die Beschreibungen und Daten in dieser Anleitung dienen nur zur Information und sind nicht bindend. Um die Qualität unserer Produkte ständig zu verbessern, behalten wir uns das Recht auf Änderungen vor. • Le descrizioni e le caratteristiche date su questo documento sono fornite a semplice titolo informativo e senza impegno. Ci riserviamo il diritto di eseguire, senza preavviso, qualsiasi modifica o miglioramento. • Las descripciones y características que figuran en este documento se dan a título de información y no de compromiso. En efecto, en bien de la calidad de nuestros productos, nos reservamos el derecho de efectuar, sin previo aviso, cualquier modificación o mejora.

THOMSON MULTIMEDIA 46, Quai Alphonse Le Gallo 92648 Boulogne Cedex FRANCE

THOMSON MULTI MEDIA

TV

Brandt FERGUSON NORDMENDE SABA TELEFUNKEN THOMSON

PARTS LIST
LISTE PIECES DETACHEES
ERSATZTEILLISTE
LISTA PARTI DI RICAMBIO
LISTA DE PIEZAS DE REPUESTO

THOMSON
21MS76G
Chassis TX91G

MODULES

MAIN	**TX91G4850150S0ES**		
AMFM	**STEREO/NICAM**	**R**	**20684410**
CRT	**CRTTX9114"**	**R**	**20590240**
FCB	**FCB910**		**25296580**
KDB	**KDB909**		**25296610**
SCI	**SCARTTX91**		**20335250**

FP23,70	MP160	⚠	10457130
FP90	MP125	⚠	10469180
GR001	TMFT1330T		10132400
IC01	TDA4665T FLAT		10155740
IE01	M51320P		20321730
IE02	MC14053BCP		46006700
IF01	TDA1771		10044490
II01	STV8224A2		10451330
IN01	U4454B		50896820
IN03	TDA7263		10281150
IN04	MC78L08ACP		10308410
IN05	MC33164P-5		10277030
IN20	MSP3400C-PP-C6		10379290
IR01	ST9293J9B1/HAK		20801180
IR02	TDA8139		10044580
IR03	ST24C04/B1		10030300
IT01	TEA5101B		10231440
IV01	STV2118B (CUT 5.1)		10384680
IX01	SAA5281ZP/E		10258810
IX02	MC7805/CT		46025200

TA06,**TF**21, **TI**32,**TK**02, **TR**01,04,05	BC847B SMD		11070770
TE01,03,04,05, **TN**06,**TX**01	BC558B		16001110
TE02,06,**TM**001, 002,003,**TR**02	BC548B		16000930
TH02,**TL**01, **TN**04,07,**TP**22	BC337-40		45001466
TI01	MMBTH10L SMD		16006500
TI31,**TV**01	BC857B SMD		30946660
TL02	BUH515D		20666700
TL13	2SC2236Y		16000220
TN01	BF799 SMD		16005860
TN05	BC848B SMD		16006290
TN08	BC858B SMD		16006330
TP20	BUL512HI		10440310
TP23	MPS750		16001340
TP34	BC858C SMD		50854683
TX02	BC548C		16000940

DC01,**DP**34, **DR**07	BZX55C5V1		80444140
DE01,**DF**22, **DK**08,**DL**01,11, 20,23,**DP**25, **DR**05,**DT**21,41, 61,**DV**01,02,03, **DX**01,02,03,04	1N4148		44009209
DF01,**DL**07,08	1N4001		16008160
DF03,04	BZX55C11		11073670
DF21	BZX55C20		30948810
DH01	BZX55C30		80444170
DH02	BZX55C5V6/ZPD5,6		44025401
DK07	BZX55C6V8		50890650
DL02,04,05,06, 09,**DP**19,23,31, 32	RGP10G		10459090
DL12	BZX55B4V3		90578000
DL13	BZX55B9V1		70438220
DL21	ZPD6,8		44074501
DN03,04	BAV103 SMD		10155030
DN05	BZX55C9V1		90578100
DP01,02,03,04	BYW27-1000		10455390
DP29,37,38	LL4148 SMD		16012450
DP33	BZX85C27/ZPY27		10246740
DP70,90	RGP15G		10272800
DP80	STTB406		20768390
DR01	BZX55B13		50890560
DR04,**DT**01	ZPD8,2		44021504
DT23,43,63	BAV21		44044407
GE001	MV5491A LED		10036730

FN01	K9260M FOS		20232110
QC01	4M433619HZ		10087710
QC02	3M579545HZ		10087720
QI01	G3962M FOS		20685860
QI31	6M5HZ		20356510
QI34	5M74HZ		20338170
QN01	18M432HZ		10334670
QR01	8M0HZ		10254430
QV01	503K0HZ		48023700
QX01	27M0HZ		20548370

FN93	31M9HZ		20498110
LI29	38M9HZ		10388320
LN01	38M9HZ		47309700

PI01	10K0 OHM		20351320
PP34	470R0 OHM		10260350

RE35,**RH**16, **RN**33,35,46	10R0 OHM 5% 0,25W	⚠	15009580
RF09	140K0 OHM 1% 0,25W		80437830
RH17,**RX**01	27R0 OHM 5% 0,25W	⚠	15009840
RL07	1K0 OHM 10% 0,50W	⚠	10226290
RL08	33R0 OHM 5% 2W		15022830
RL09	8R2 OHM 10% 7W		70432630
RL11	15R0 OHM 5% 0,50W	⚠	10226280
RL12,13,14	0R22 OHM 5% 0,50W	⚠	10305450
RL16	82K0 OHM 1% 0,70W		10148310
RL22	78K7 OHM 1% 0,70W		10224680
RN37,38	4R7 OHM 5% 0,30W	⚠	15010020
RP01	5R1 OHM 10% 2,50W		10472390
RP02	25R0 OHM 220V PTC	⚠	30093400
RP15	10M0 OHM 5% 0,70W	⚠	10074320
RP20	1R0 OHM 5% 2,50W		10383240
RP44	1R0 OHM 5% 0,25W	⚠	15009730

R : RECYCLED PART
: PIECE RECYCLEE
: AUSTAUSCHTEILE
: RICAMBIO RICICLATO
: MODULO REPROCESADO

For any requests, please contact THOMSON multimedia after sales service area
Pour toutes précisions, contactez votre service apres vente local THOMSON multimedia
Für weitere Auskünfte, wenden Sie sich bitte an die THOMSON multimedia Kundendienste
Per precisazioni, contattare l'assistenza tecnica THOMSON multimedia
Para cualquier pregunta, por favor contactar con el responsable de zona del servicio postventa de THOMSON multimedia

No copying, translation, modification on other use authorized. All rights reserved worldwide. • Tous droits de reproduction, de traduction, d'adaptation et d'exécution réservés pour tous les pays. • Sämtliche Urheberrechte an diesen Texten und Zeichnungen Vervielfältigungen - auch auszugsweise - nur mit unserer vorherigen Zustimmung zulässig. Alle Rechte vorbehalten. • I diritti di riproduzione, di traduzione, e esecuzione sono riservati per tutti i paesi. • Derechos de reproduccion, de traduccion, de adap

RT01	47R0 OHM 5% 0,30W	⚠	15010010
RT02	15R0 OHM 5% 2W		13001350
RT03	10K0 OHM 5% 0,50W		40434960
RT23,43	68K0 OHM 5% 1W		10133770
RT25,45,65	2K2 OHM 5% 0,50W		30938220
RT48	2K2 OHM 5% 0,30W	⚠	41319509
RV02	56R0 OHM 5% 0,30W	⚠	15010060

CL04	7N2F 3,5% 1K6V		20153470
CL05	360N0F 5% 250V		43441500
CL10,15	330P0F 20% 1K0V		14035270
CL17,**CP**13,91	330P0F 20% 400V		14002220
CL18,**CP**79	470P0F 10% 3K0V		14006050
CP01,02	100N0F 20% 275V	⚠	10331520
CP05,06	4N7F 1K0V		10058740
CP10	100U0F 385V		30662900
CP15	1N0F 20% 400V	⚠	43106800
CP21	1N0F 10% 1K0V		43441400
CP24	10N0F 10% 100V		10279180
CP71	2N2F 10% 400V		10188880
CT03	2N2F 2K0V		14036020

LL01	DRIVER		20609540
LL03		⚠	80367500
LL05	DSTL28	⚠	10462790
LP02		⚠	10395160
LP03	SMT17	⚠	10387120

OTHER PARTS
AUTRES PIECES
SONSTIGE TEILE
ALTRE PARTI
OTRAS PIEZAS

BE01,02	SCART SOCKET PRISE PERITEL EURO-AV-BUCHSE EUROPRESA NORMALIZZATA EUROCONECTOR		10357750
BM010	CINCH SOCKET PRISE CINCH CHINCH-BUCHSE PRESA CINCH TOMA CINCH		10512920
BM011	SVHS SOCKET PRISE SVHS S-VHS-BUCHSE PRESA SVHS TOMA SVHS		80406031
BM012	HEADPHONE PLUG PRISE CASQUE BUCHSE KOPFHOERER PRESA JACK TOMA JACK		10002260
BT01	CATHODE RAY TUBE SOCKET SUPPORT TUBE CATHODIQUE BILDROEHRENFASSUNG SUPPORTO TUBO CATODICO SOPORTE T.R.C	⚠	20631370
FP01	1A6T TIME-LAG FUSE 1A6T FUSIBLE TEMPORISE 1A6T SICHERUNG 1A6T FUSIBILE TEMPORIZZATO 1A6T FUSIBLE TEMPORIZADO	⚠	48064700
NH01	CTT5000T UHF/VHF TUNER CTT5000T TETE UHF/VHF CTT5000T UHF/VHF TUNER CTT5000T TUNER UHF/VHF CTT5000T SINTONIZADOR UHF/VHF	R	20808880
SM001,002, 003,004	MICROSWITCH MICRO CONTACTEUR MIKROSCHALTER MICROINTERRUTTORE MICROCONTACTOR		20540300

EQUIPMENT/PRESENTATION
EQUIPEMENT/PRESENTATION
AUSSTATTUNG/GEHAEUSE
PARTI VARIE
EQUIPO/PRESENTACION

CABINET WITH FRONT PANEL COFFRET EQUIPE AVEC FACADE GEHAEUSE KPL MIT FRONTPLATTE MOBILE COMPLETO MUEBLE EQUIPADO		25312590
16R OHM 5W LOUDSPEAKER 50X90 16R OHM 5W HAUT PARLEUR 50X90 16R OHM 5W LAUTSPRECHER 50X90 16R OHM 5W ALTOPARLANTE 50X90 16R OHM 5W ALTAVOZ 50X90		10317070
REAR PANEL DOS RUECKWAND PANNELLO POSTERIORE TAPA POSTERIOR	⚠	25294400
POWER SUPPLY LEAD CORDON D'ALIMENTATION NETZKABEL CAVO DI ALIMENTAZIONE CABLE DE ALIMENTACION	⚠	10260830
ON/OFF BUTTON TOUCHE MARCHE/ARRET EIN-AUS TASTE TASTO ACCESO/SPENTO TECLA MARCHA/PARADA		25294060
ON/OFF SWITCH CONTACTEUR MARCHE/ARRET EIN-AUS SCHALTER CONTATTORE ACCESO/SPENTO CONTACTOR MARCHA/PARADA	⚠	10276500
BUTTON ASSY ENSEMBLE DE TOUCHES TASTENEINHEIT ASSIEME TASTI CONJUNTO DE TECLAS		25313820
A51EFS83X191 CATHODE RAY TUBE A51EFS83X191 TUBE CATHODIQUE A51EFS83X191 FARBBILDROEHRE A51EFS83X191 TUBO CATODICO A51EFS83X191 T.R.C	⚠	10515820
DEGAUSSING COIL BOBINE DE DEMAGNETISATION ENTMAGNETISIERUNGSSPULE BOBINA DI SMAGNETIZZAZIONE BOBINA DE DESIMANTACION	⚠	47320195
RCT3003 REMOTE CONTROL RCT3003 TELECOMMANDE RCT3003 FERNBEDIENUNG RCT3003 TELECOMANDO RCT3003 TELEMANDO		10292960
FOLDING BOX EMBALLAGE CARTON KARTON IMBALLAGGIO CARTONE EMBALAJE CARTON		25288160
FITTING UPPER CALE SUPERIEURE POLSTER OBEN DISTANZIATORE SUPERIORE CALZO SUPERIOR		25288040
FITTING DOWNER CALE INFERIEURE POLSTER UNTEN DISTANZIATORE INFERIORE CALZO INFERIOR		25288050

INSTRUCTIONS
NOTICES
ANLEITUNGEN
INSTRUCZIONI
MANUALE

21MS76G PARTS LIST 21MS76G LISTE DE PIECES DETACHEES 21MS76G ERSATZTEILLISTE 21MS76G LISTA PARTI DI RICAMBIO 21MS76G LISTA DE PIEZAS DE REPUESTO	35049440
TX91G SERVICE MANUAL (EUROPE) TX91G DOC TECHNIQUE (EUROPE) TX91G TECHNISCHE DOKUMENTATION (EUROPE) TX91G DOCUMENTAZIONE TECNICA (EUROPE) TX91G DOCUMENTACION TECNICA (EUROPE)	35041190
21MS76G UM THOMSON D/I/GB/GR/F 21MS76G NU THOMSON D/I/GB/GR/F 21MS76G BA THOMSON D/I/GB/GR/F 21MS76G IU THOMSON D/I/GB/GR/F 21MS76G IU THOMSON D/I/GB/GR/F	25292270

The description and characteristics given here are of informative significance only, and non committal. To keep up the high quality of our products, we reserve the right to make any changes or improvement without previous notice. • Les descriptions et caractéristiques figurant sur ce document sont données à titre d'information et non d'engagement. En effet, soucieux de la qualité de nos produits, nous nous réservons le droit d'effectuer, sans préavis, toute modification ou amélioration. • Die Beschreibungen und Daten in dieser Anleitung dienen nur zur Information und sind nicht bindend. Um die Qualität unserer Produkte ständig zu verbessern, behalten wir uns das Recht auf Änderungen vor. • Le descrizioni e le caratteristiche date su questo documento sono fornite a semplice titolo informativo e senza impegno. Ci riserviamo il diritto di eseguire, senza preavviso, qualsiasi modifica o miglioramento. • Las descripciones y características que figuran en este documento se dan a título de información y no de compromiso. En efecto, en bien de la calidad de nuestros productos, nos reservamos el derecho de efectuar, sin previo aviso, cualquier modificación o mejora.

THOMSON MULTIMEDIA 46, Quai Alphonse Le Gallo 92648 Boulogne Cedex FRANCE

COMPLETE PCB DIAGRAM - SCHEMA PLATINE PRINCIPALE EQUIPEE - SCHALTUNG LEITERPLATTE KPL. - SCHEMA PIASTRA COMPLETA - ESQUEMA PLATINA EQUIPADA

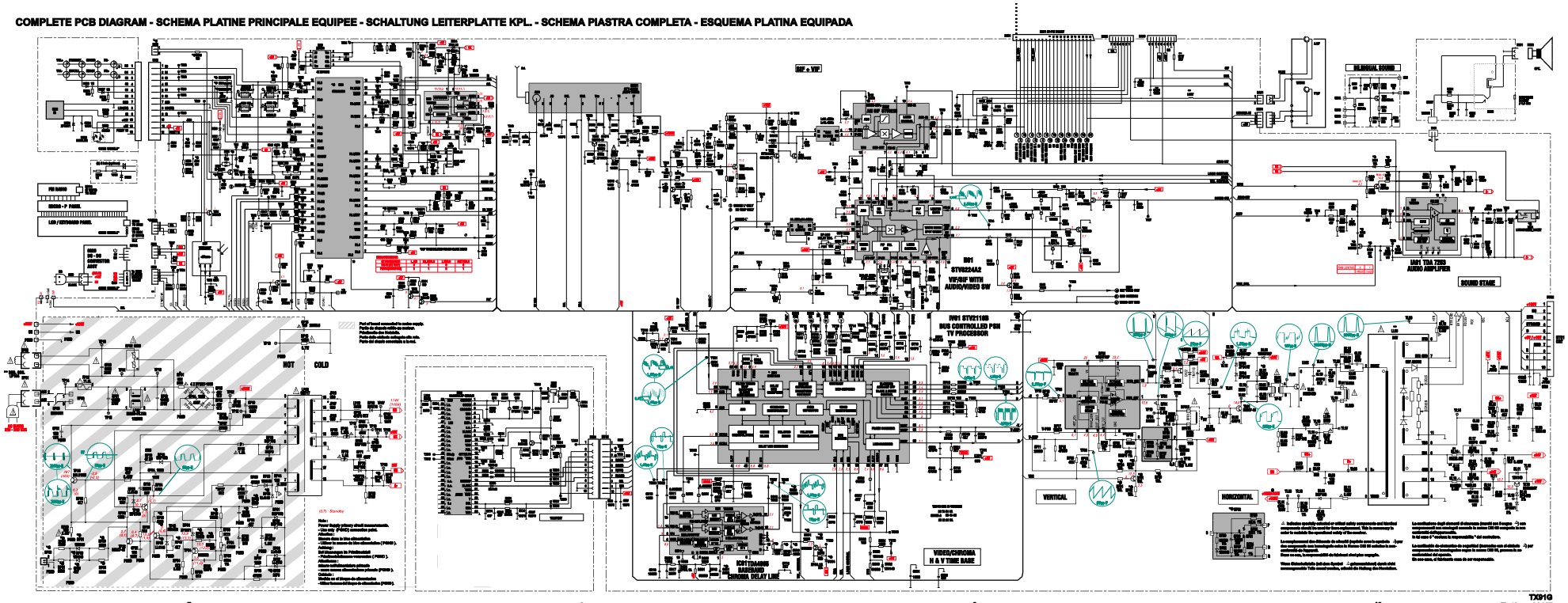

7 8 9 10

TX91G
First issue 04 / 07

COMPLETE PCB DIAGRAM - SCHEMA PLATINE PRINCIPALE EQUIPEE - SCHALTUNG LEITERPLATTE KPL. - SCHEMA PIASTRA COMPLETA - ESQUEMA PLATINA EQUIPADA

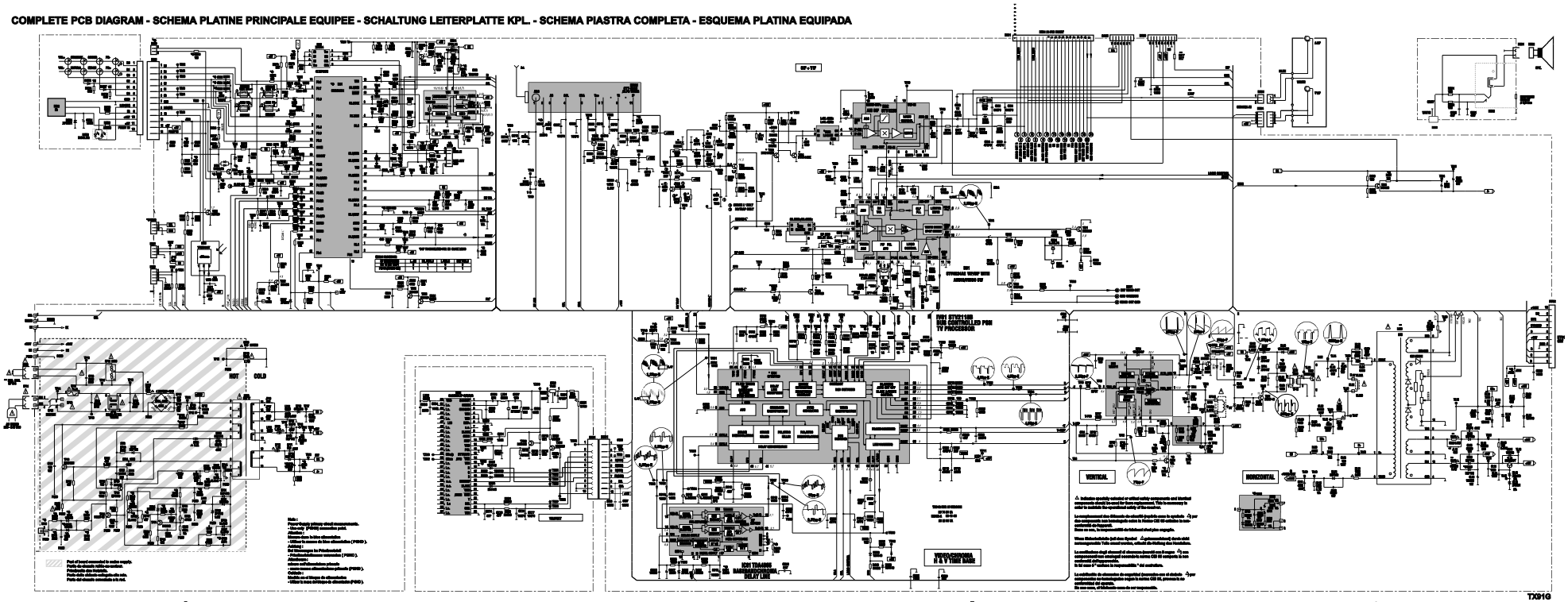

5 6 7 8

TX91Q
First issue 02 / 97

COMPLETE PCB DIAGRAM - SCHEMA PLATINE PRINCIPALE EQUIPEE - SCHALTUNG LEITERPLATTE KPL. - SCHEMA PIASTRA COMPLETA - ESQUEMA PLATINA EQUIPADA

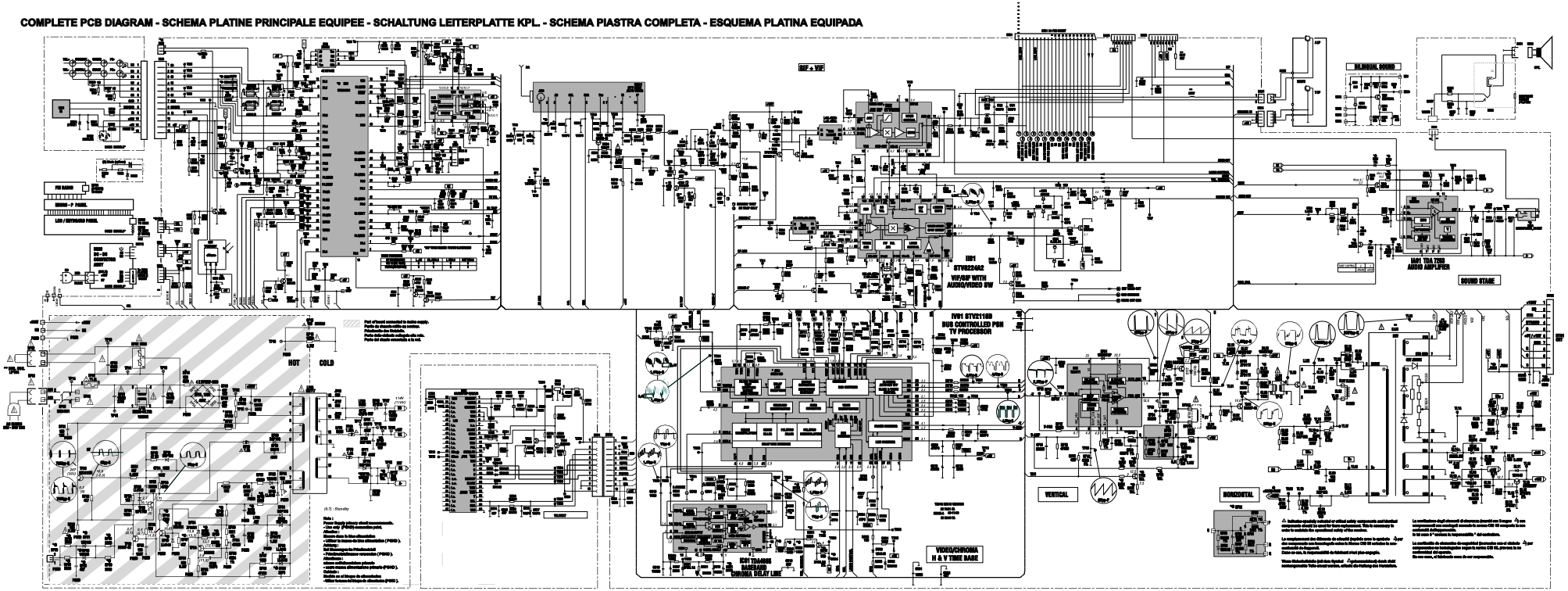

NICAM MODULE - MODULE NICAM - NICAM BAUSTEIN - MODULO NICAM - MÓDULO NICAM

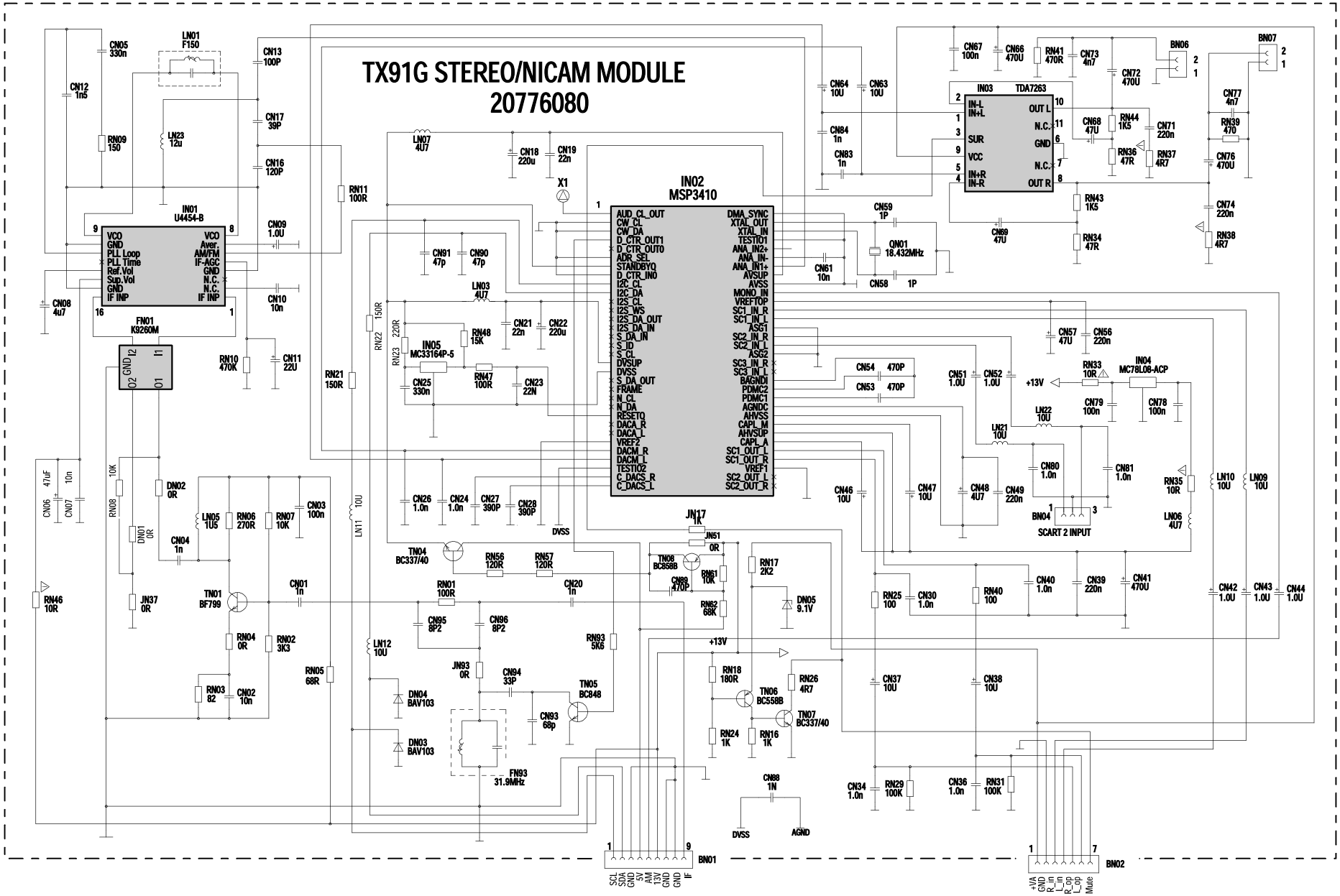

SCART INTERFACE MODULE - MODULE INTERFACE PERITELEVISION - SCART INTERFACE - MODULO PRESA PERITEL - MODULO EUROTOMA

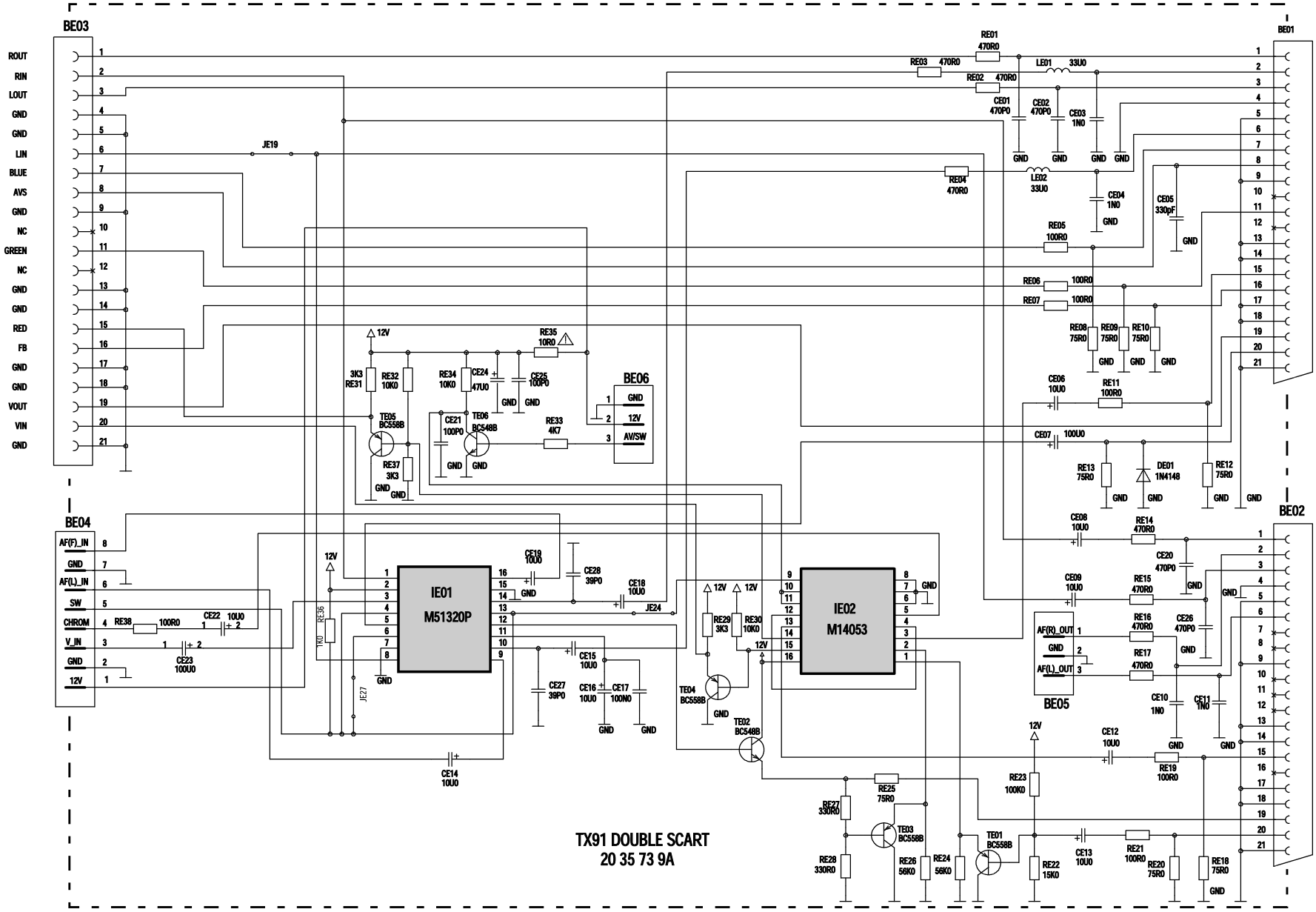

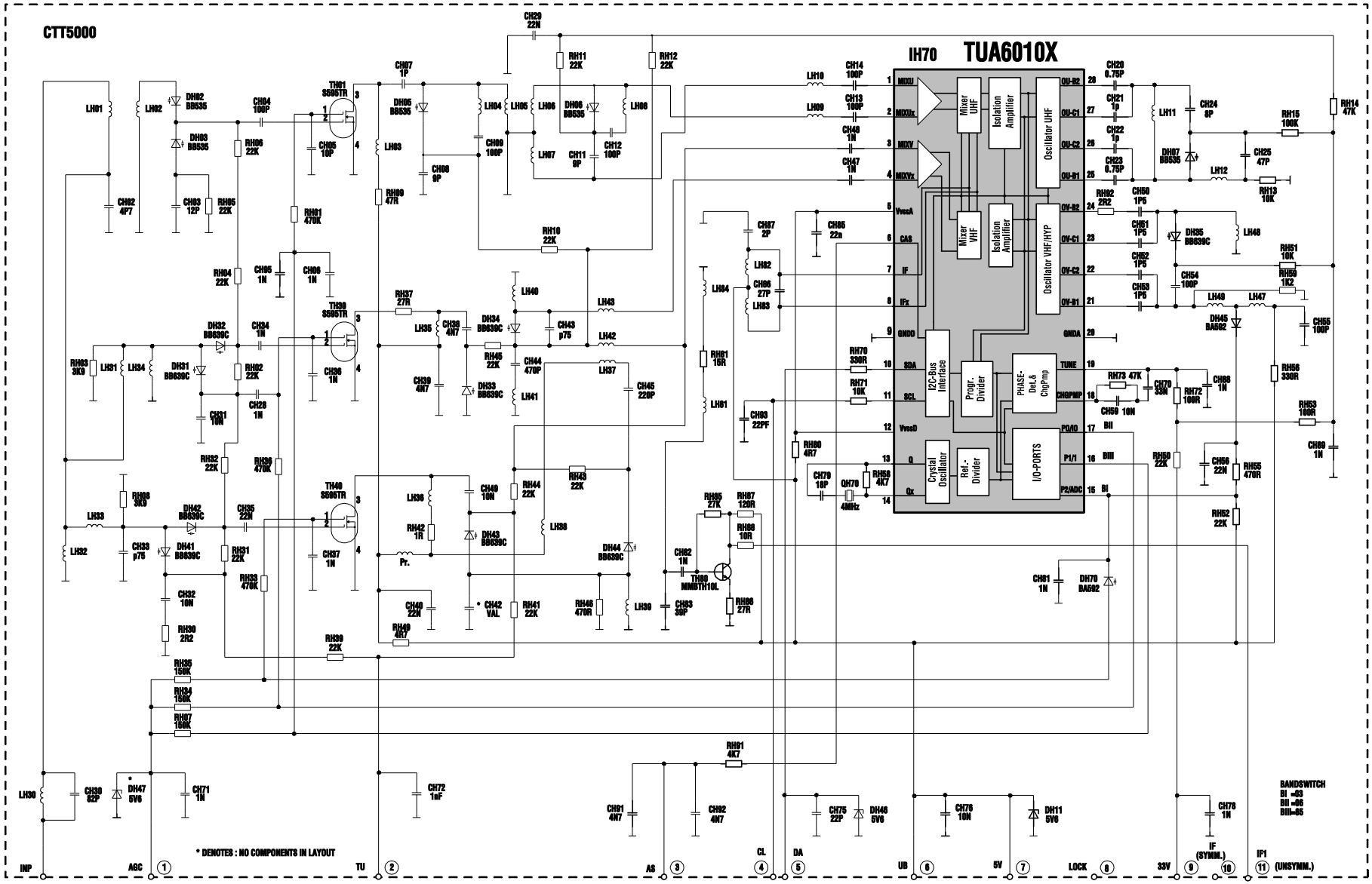
CTT5000
IH70 TUA6010X
Mixer UHF
Isolation Amplifier
Oscillator UHF
Mixer VHF
Isolation Amplifier
Oscillator VHF/HYP
I2C-Bus Interface
Progr. Divider
PHASE-Det.& ChgPmp
Crystal Oscillator
Ref.-Divider
I/O-PORTS
* DENOTES : NO COMPONENTS IN LAYOUT
BANDSWITCH
BI =03
BII =06
BIII=85
INP
AGC
TU
AS
CL
DA
UB
5V
LOCK
33V
IF (SYMM.)
IF1 (UNSYMM.)

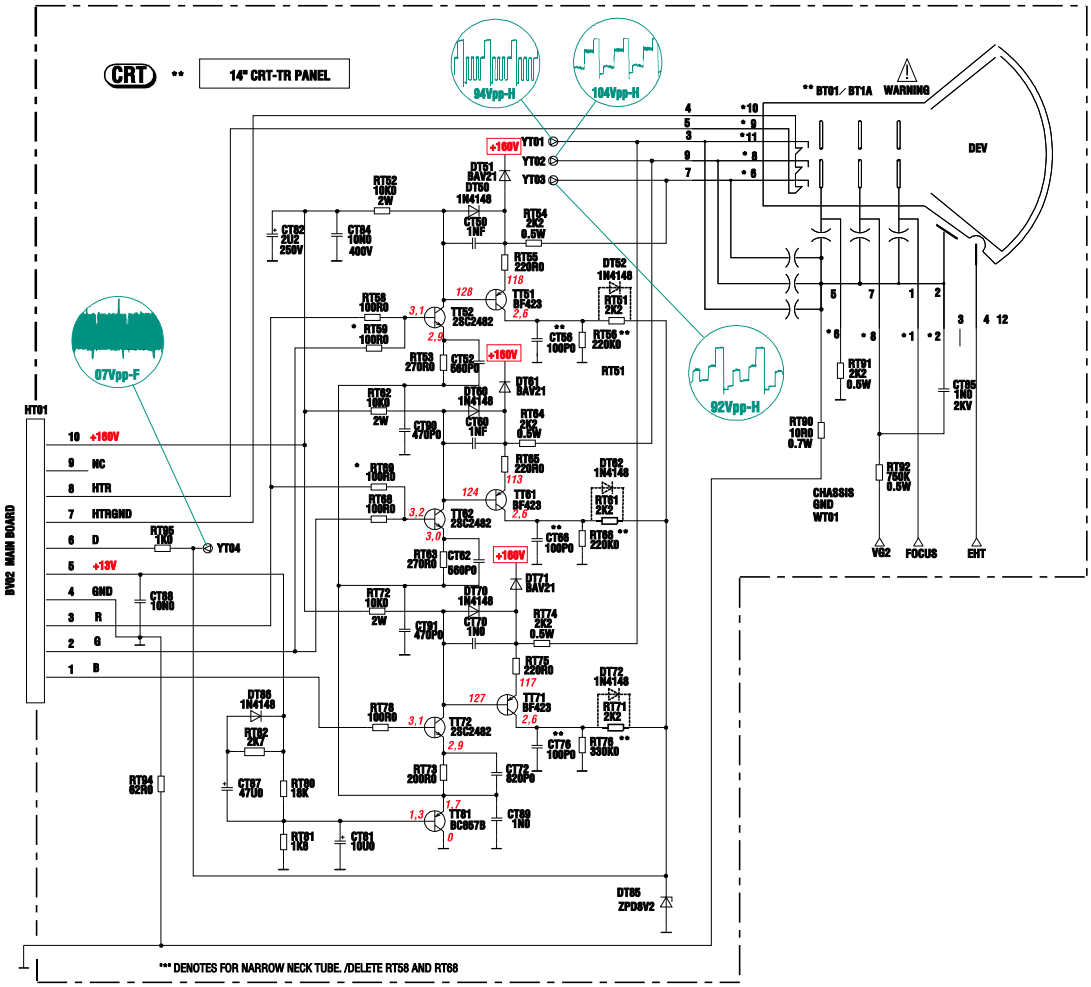
CRT
14" CRT-TR PANEL
94Vpp-H
104Vpp-H
92Vpp-H
07Vpp-F
** BT01/ BT1A WARNING
DEV
HT01
BV02 MAIN BOARD
+160V
NC
HTR
HTRGND
D
+13V
GND
R
G
B
YT01
YT02
YT03
YT04
CHASSIS
GND
WT01
VG2
FOCUS
EHT
DT85
ZPD8V2
*** DENOTES FOR NARROW NECK TUBE. /DELETE RT58 AND RT68

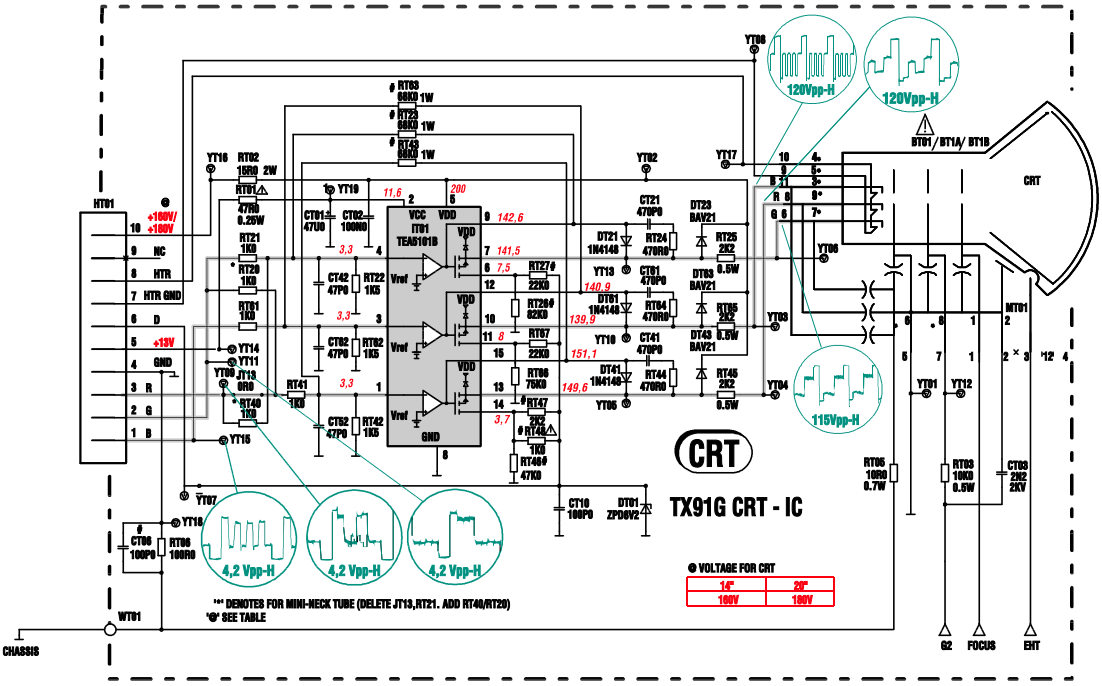
120Vpp-H
120Vpp-H
115Vpp-H
4,2 Vpp-H
4,2 Vpp-H
4,2 Vpp-H
BT01/ BT1A/ BT1B
CRT
HT01
+160V/
+160V
NC
HTR
HTR GND
D
+13V
GND
R
G
B
IT01
TEA5101B
VCC
VDD
Vref
GND
CRT
TX91G CRT - IC
VOLTAGE FOR CRT
14"
20"
160V
180V
*** DENOTES FOR MINI-NECK TUBE (DELETE JT13,RT21. ADD RT40/RT20)
'@' SEE TABLE
WT01
CHASSIS
G2
FOCUS
EHT

MAIN BOARD - PLATINE PRINCIPALE - CHASSIS GRUNDPLATTE - PIASTRA PRINCIPALE - PLATINA PRINCIPAL

COMPONENT SIDE - COTE COMPOSANTS - BESTÜCKUNGSSEITE - LATO COMPONENTI - LADO COMPONENTES

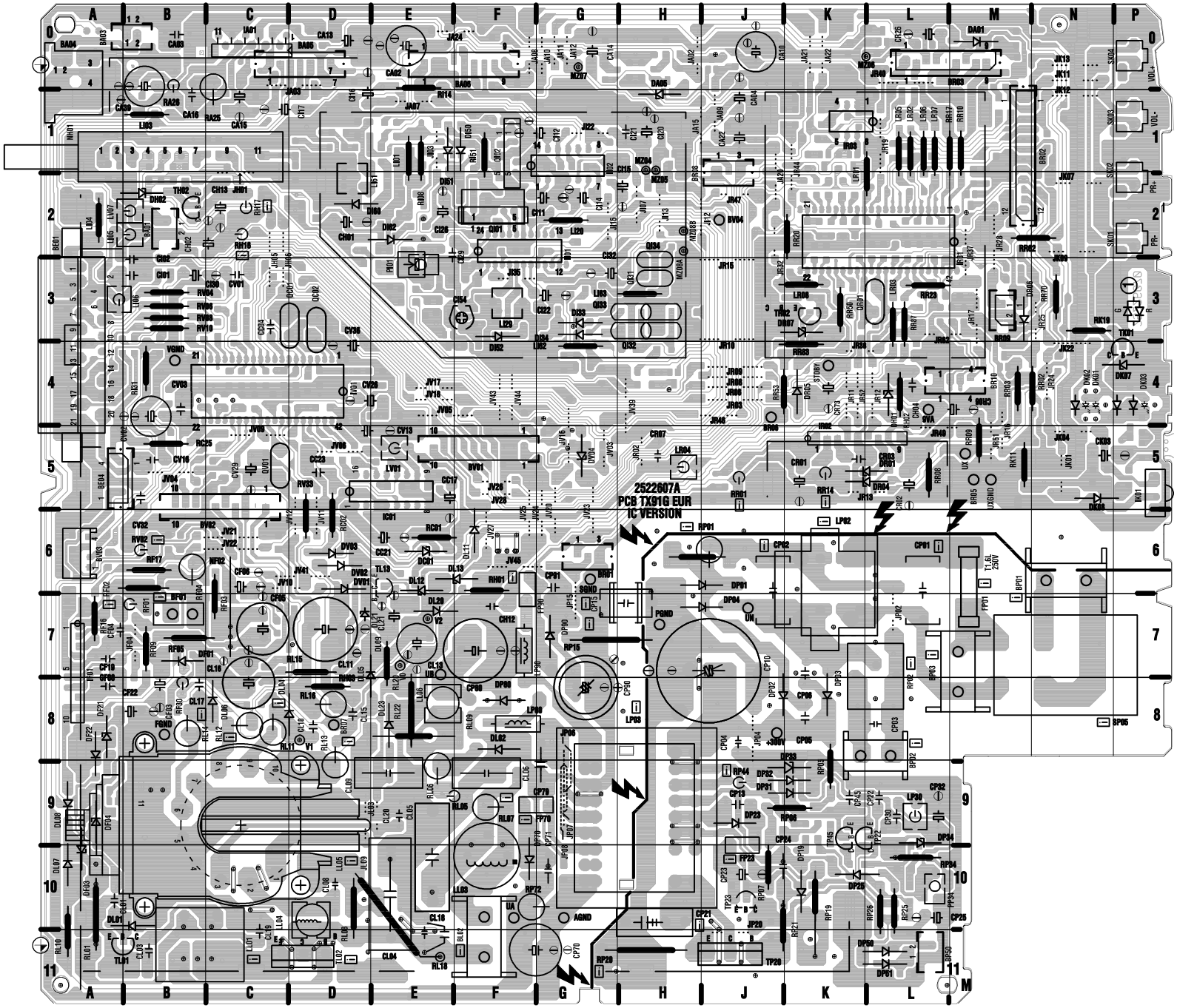

VIDEO AMPLIFIER BOARD - PLATINE AMPLIFICATEUR VIDEO - VIDEOVERSTÄRKERPLATTE - PIASTRA AMPLIFICATORE VIDEO - PLATINA AMPLIFICADOR VIDEO

- TRANSISTOR VERSION -

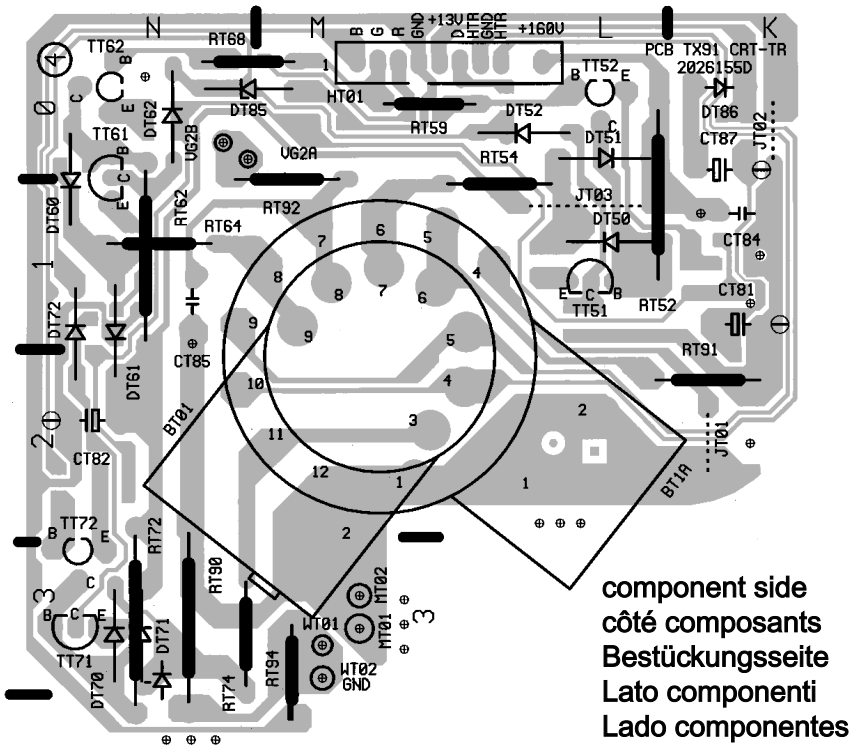

component side
côté composants
Bestückungsseite
Lato componenti
Lado componentes

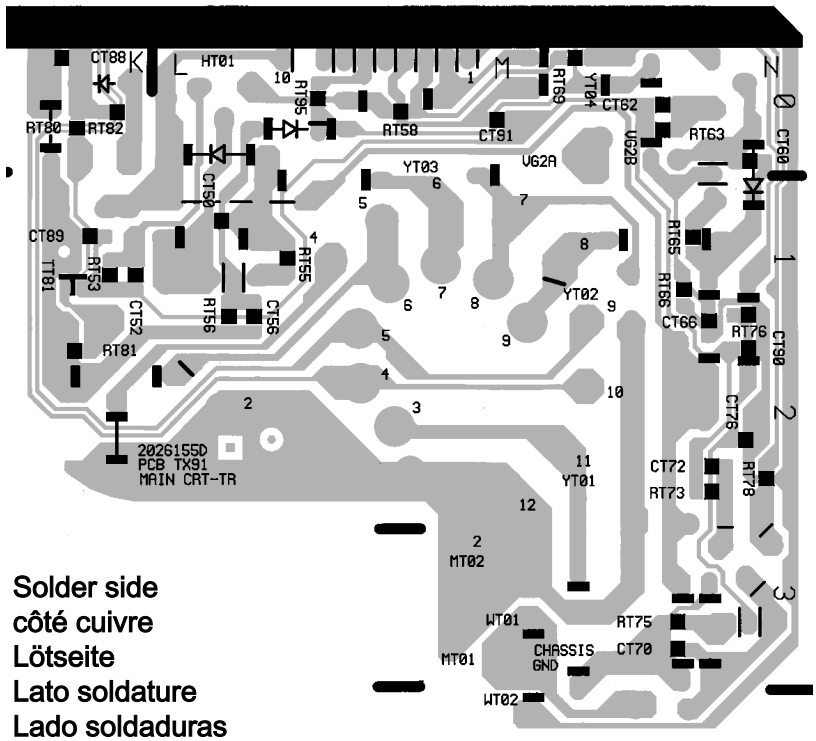

Solder side
côté cuivre
Lötseite
Lato soldature
Lado soldaduras

TELETEXT MODULE - MODULE TELETEXTE - VIDEOTEXT MODUL
MODULO TELEVIDEO - MODULO TELETEXTO

COMPONENT SIDE - COTE ELEMENTS - BESTÜCKUNGSSEITE
LATO COMPONENTI - LADO COMPONENTES

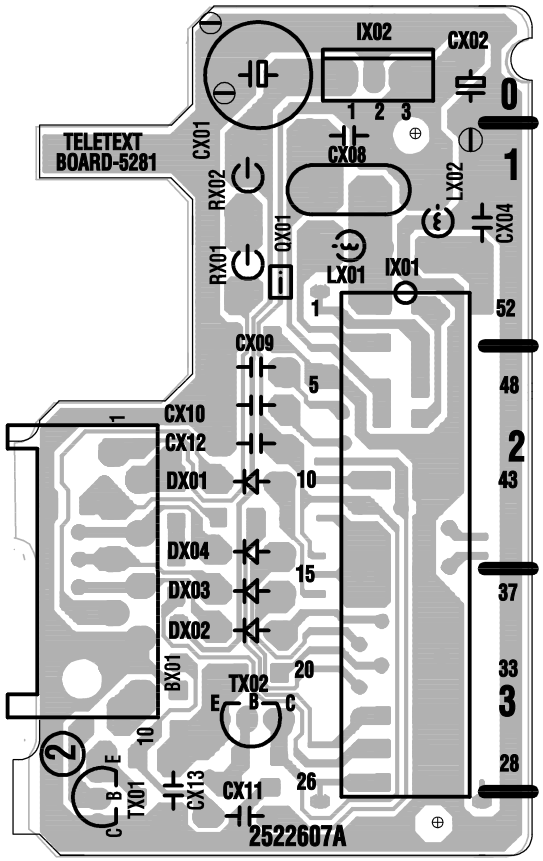

SOLDER SIDE - COTE CUIVRE - LÖTSEITE
LATO SALDATURE - LADO DEL COBRE

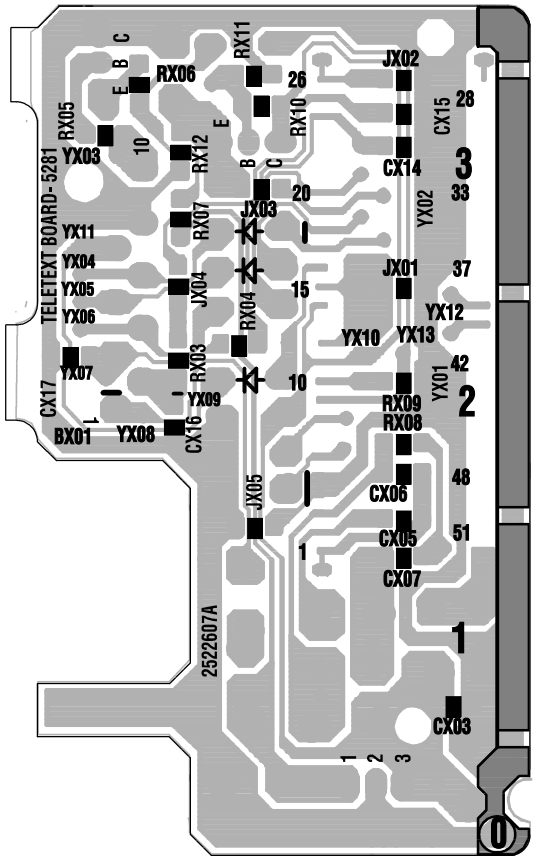

VIDEO AMPLIFIER BOARD - PLATINE AMPLIFICATEUR VIDEO - VIDEOVERSTÄRKERPLATTE - PIASTRA AMPLIFICATORE VIDEO - PLATINA AMPLIFICADOR VIDEO

COMPONENT SIDE - COTE ELEMENTS - BESTÜCKUNGSSEITE
LATO COMPONENTI - LADO COMPONENTES

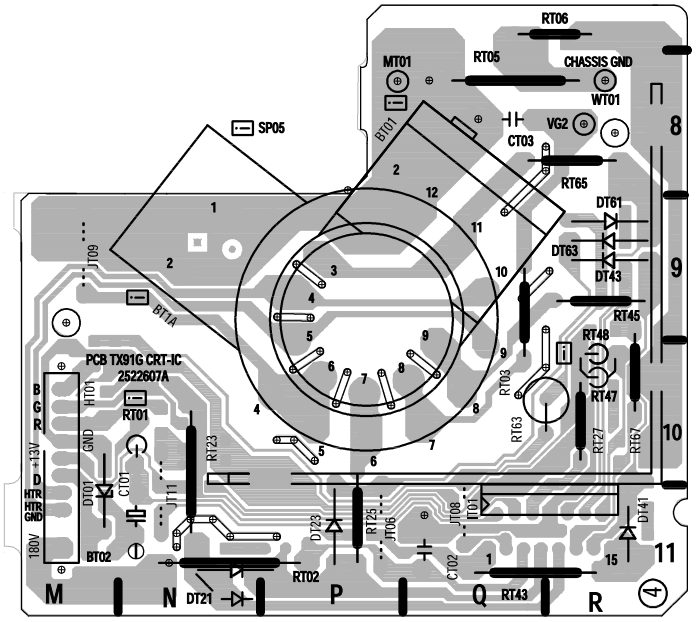

SOLDER SIDE - COTE CUIVRE - LÖTSEITE
LATO SALDATURE - LADO DEL COBRE

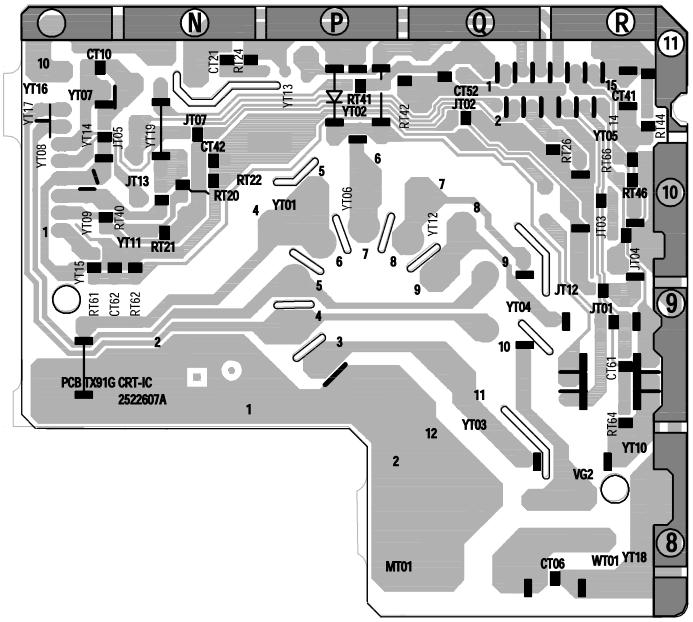

MAIN BOARD - PLATINE PRINCIPALE - CHASSIS GRUNDPLATTE - PIASTRA PRINCIPALE - PLATINA PRINCIPAL
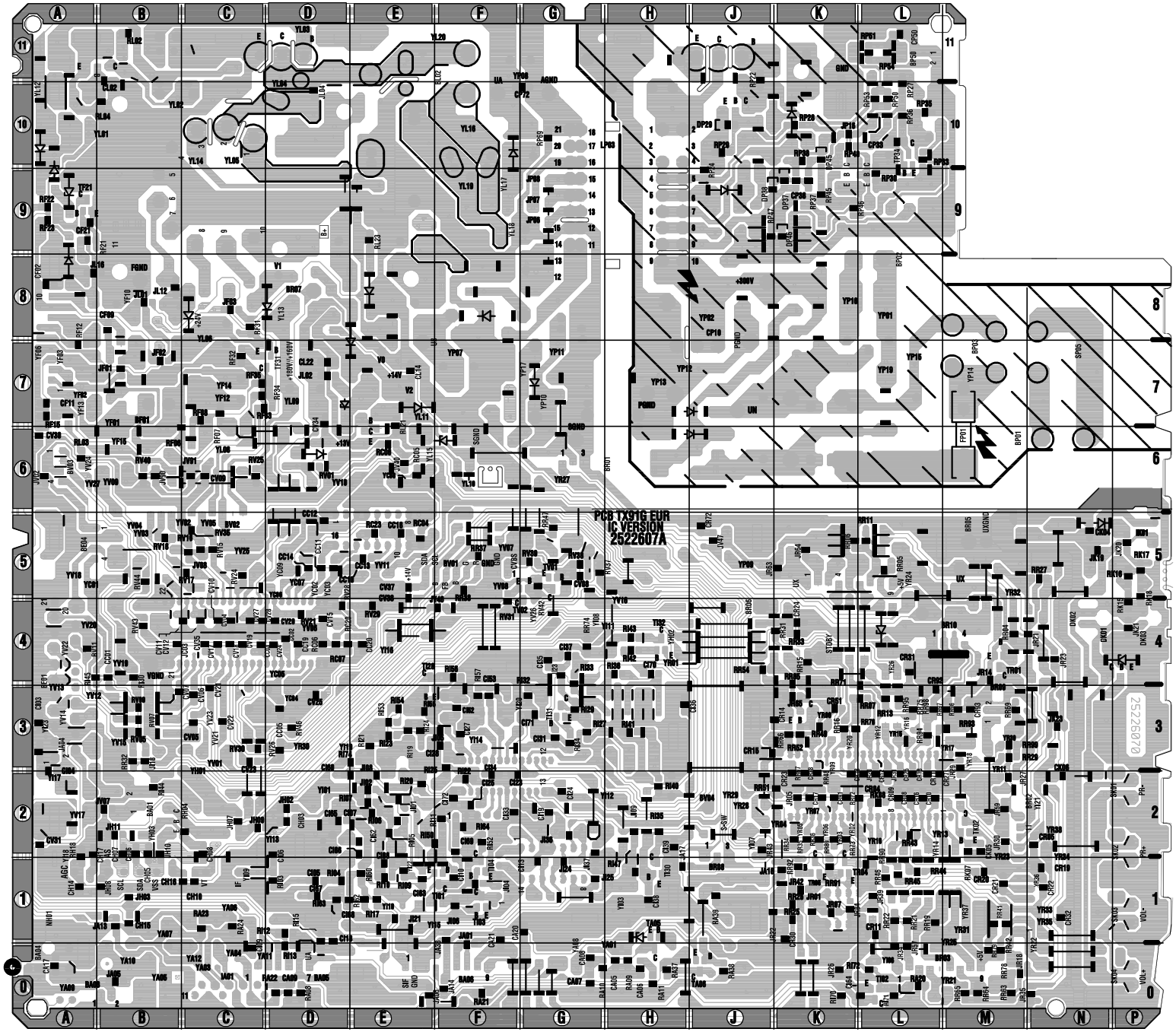
SOLDER SIDE - CÔTE SOUDURES - LÖTSEITE - LATO SALDATURE - LADO SOLDADURAS